DRAFTING SYMBOLS

SECURITY OFFICE — ROOM NAME
234 A — ROOM NUMBER, ROOM FINISH KEY

A / 1 — NEW COLUMN REFERENCE GRID

1 / 6.1 — SECTION OR DETAIL NUMBER; DIRECTION OF CUTTING PLANE; SHEET NUMBER ON WHICH SECTION OR DETAIL IS DRAWN

1 / 2.1 6.1 DRAWING TITLE 1/8"=1'-0" — SECTION OR DETAIL NUMBER; INDICATES SCALE; SHEET NUMBER ON WHICH SECTION OR DETAIL IS DRAWN; SHEET NUMBER ON WHICH THIS SECTION OR DETAIL IS CUT OR REFERENCED (ONE SHEET ONLY)

1 / 5.2 — DIRECTION OF CUTTING PLANE; LONGITUDINAL OR TRANSVERSE BUILDING SECTION NUMBER; SHEET NUMBER ON WHICH LONGITUDINAL OR TRANSVERSE BUILDING SECTION IS DRAWN

1 / 8.1 — SURFACE SHOWN IN ELEVATION; ELEVATION NUMBER; SHEET ON WHICH ELEVATION IS DRAWN

1 / 6.2 — DETAIL NUMBER; AREA OF DETAIL; SHEET NUMBER ON WHICH ENLARGED DETAIL IS DRAWN

3 — REVISION NUMBER

2/6.2 — INDICATES SECTION OR DETAIL NO. 2 APPEARING ON SHEET NO 6.2

PROJECT DIRECTORY

ARCHITECT
UNABRIDGED ARCHITECTURE PLLC
ALLISON AND JOHN ANDERSON, ARCHITECTS
443 MAIN STREET
BAY ST LOUIS, MS 39520
TEL: 228.467.1149

STRUCTURAL ENGINEER
BALDAUF HERRIN ASSOCIATES
TOM HERRIN, P.E.
9696 SKILLMAN STREET, SUITE 270
DALLAS, TEXAS 75243
TEL: 214-341-7575
FAX: 214-341-4850
WWW.BHA-SE.COM

OWNER
GRAND BAY NATIONAL ESTUARINE RESEARCH RESERVE
AYESHA GRAY
6005 BAYOU HERON ROAD
MOSS POINT, MISSISSIPPI 39562
TEL: (228) 475-7047

BUILDING INFORMATION

PROJECT ADDRESS
6005 BAYOU HERON ROAD, MOSS POINT, MISSISSIPPI 39562

PROJECT DESCRIPTION
OUTDOOR PAVILION SPACES INCLUDING A RAMP TO AN ELEVATED PLATFORM, SEATING AREA, AND BIRD BLIND, AT THE EDGE OF THE PINE SAVANNAH OVERLOOKING THE MARSH

BUILDING AREA

RAMP, ELEVATED PLATFORM AND SEATING AREA:	420 SF
BIRD BLIND:	280 SF
TOTAL	700 SF

MAJOR APPLICABLE CODES AND REGULATIONS
(NOT LIMITED TO THE FOLLOWING):
INTERNATIONAL BUILDING CODE, 2012 EDITION, INCL REFERENCED CODES
INTERNATIONAL EXISTING BUILDING CODE 2012 EDITION
AMERICANS WITH DISABILITIES ACT (ADA) 2010

OCCUPANCY CLASSIFICATION
GROUP A-3
OCCUPANCY: 140 PEOPLE MAX (STANDING ASSEMBLY, 5SF PER PERSON)

CONSTRUCTION TYPE
TYPE V-B, UNSPRINKLERED

VICINITY MAP

INDEX OF DRAWINGS

ARCHITECTURAL

1 COVER SHEET
2 FLOOR PLAN
3 EXTERIOR ELEVATIONS
4 SECTIONS
5 DETAILS

STRUCTURAL

S1.01 GENERAL NOTES
S2.01 FOUNDATION / FLOOR FRAMING PLAN
S2.02 ENLARGED BIRD BLIND PLAN
S2.03 TRELLIS FRAMING PLAN
S4.01 SECTIONS AND DETAILS
S4.02 SECTIONS AND DETAILS

UNABRIDGED ARCHITECTURE PLLC
ALLISON H. ANDERSON AIA
JOHN M. ANDERSON AIA
443 MAIN STREET
BAY ST LOUIS, MS 39520
228.467.1149

REGISTERED ARCHITECT Allison H. Anderson 2888 STATE OF MISSISSIPPI

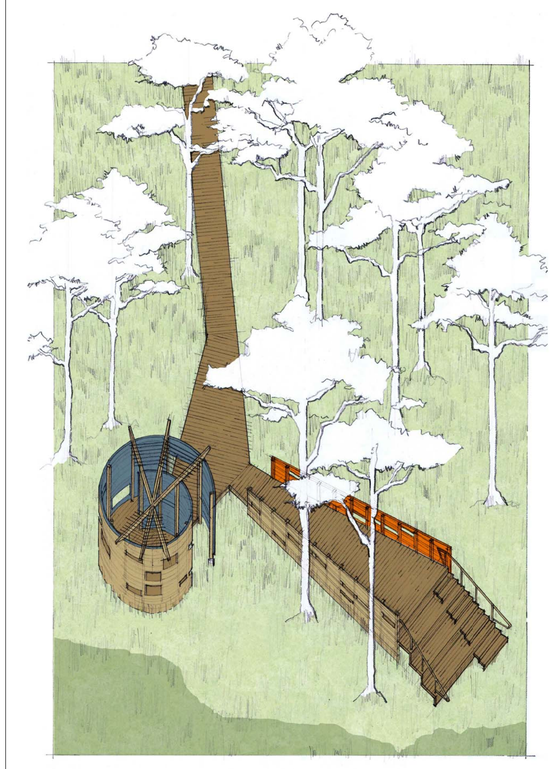

SCHEMATIC VIEW FROM WEST

GRAND BAY NATIONAL ESTUARINE RESEARCH RESERVE NATURE PAVILION

6005 BAYOU HERON RD, MOSS POINT, MS 39562

14 OCTOBER 2016

COVER SHEET

GRAND BAY NERR
OUTDOOR PAVILION
MOSS POINT, MS

14 OCTOBER 2016

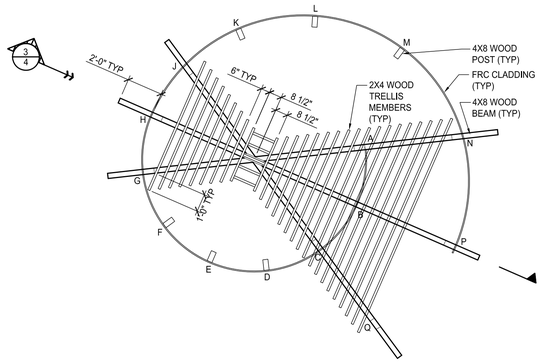

ROOF PLAN

1/4" = 1'-0"

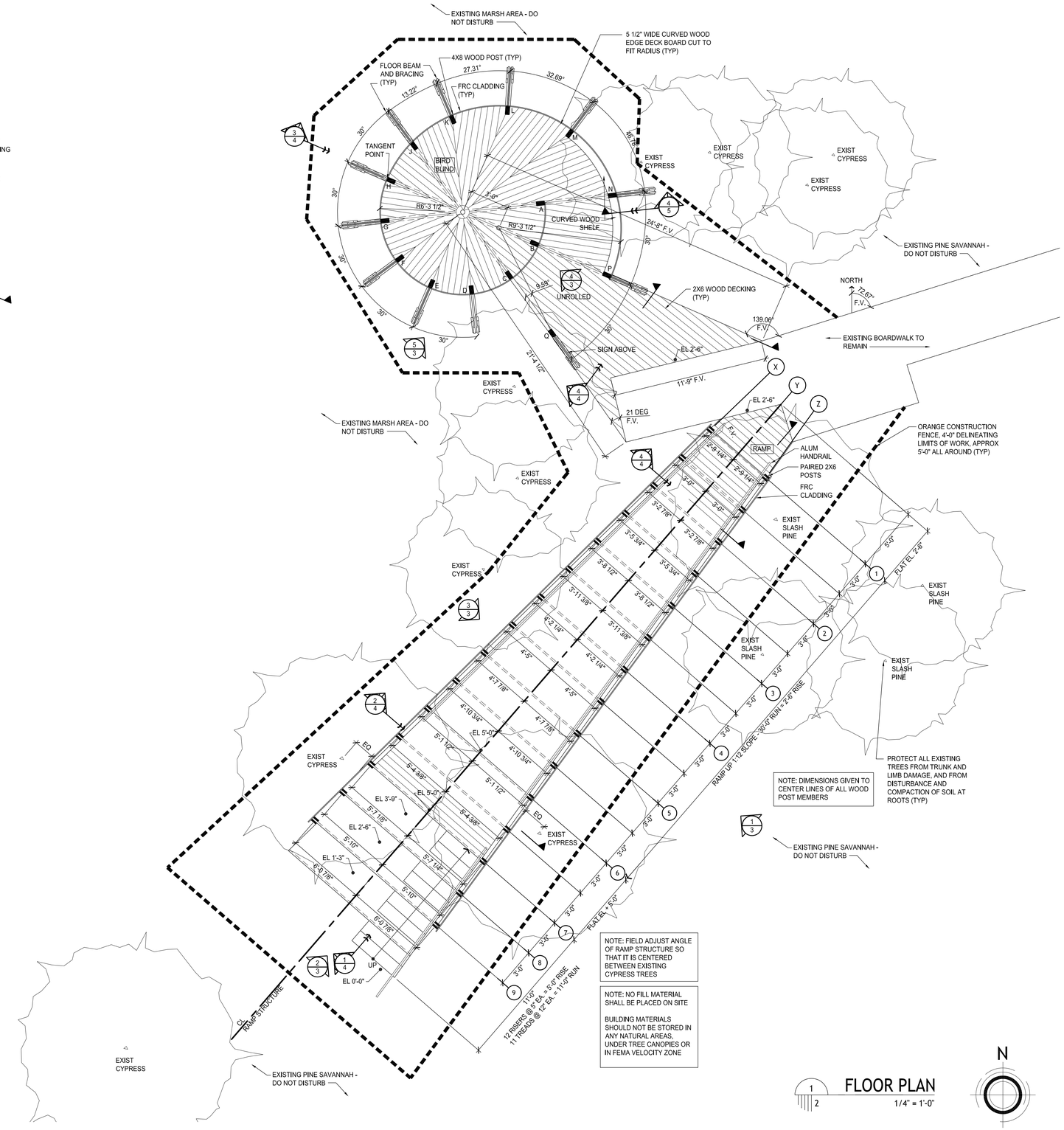

FLOOR PLAN

1/4" = 1'-0"

N

UNABRIDGED ARCHITECTURE PLLC

ALLISON H. ANDERSON AIA
JOHN M. ANDERSON AIA

443 MAIN STREET
BAY ST LOUIS, MS 39520
228.467.1149

REGISTERED ARCHITECT Allison H. Anderson 2888 STATE OF MISSISSIPPI

FLOOR PLAN

GRAND BAY NERR

OUTDOOR PAVILION
MOSS POINT, MS

14 OCTOBER 2016

2

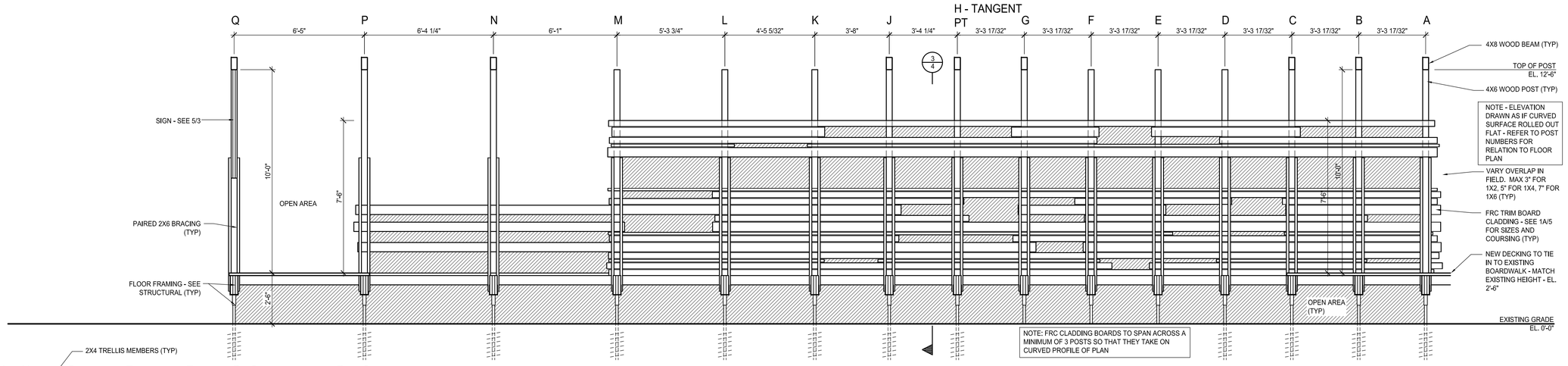

4 / 2 3 UNROLLED ELEVATION - BIRD BLIND

3/8" = 1'-0"

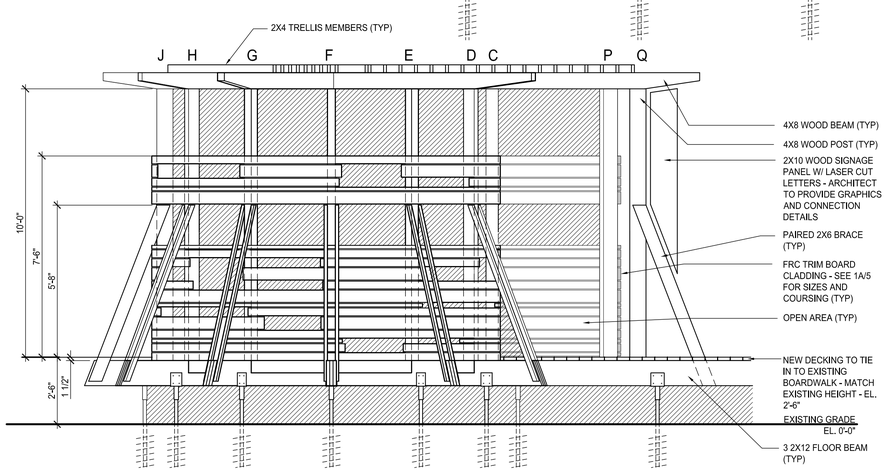

5 / 2 3 SW ELEVATION - BIRD BLIND

3/8" = 1'-0"

SEE 4/3 FOR UNROLLED ELEVATION SHOWING OPENING LAYOUT AT ALL SIDES

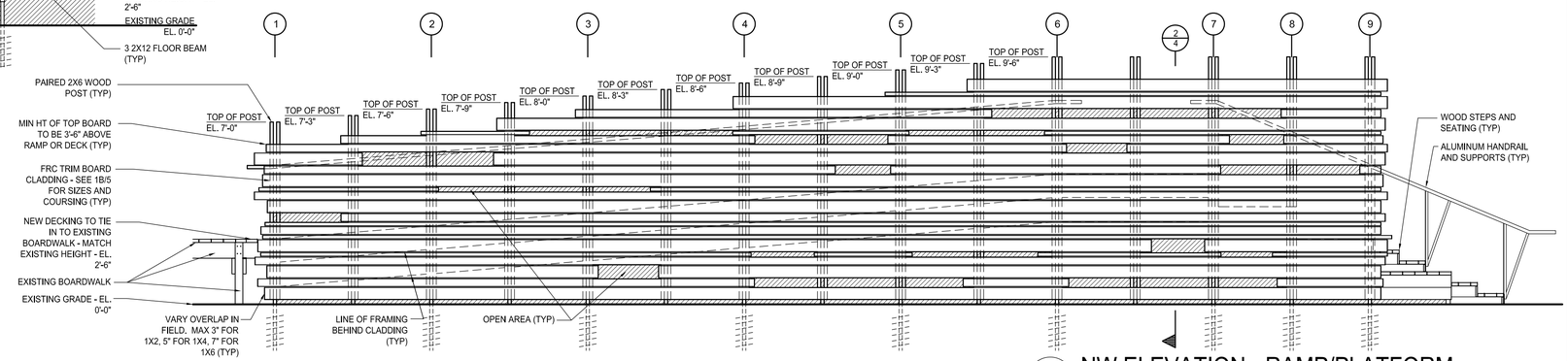

3 / 2 3 NW ELEVATION - RAMP/PLATFORM

3/8" = 1'-0"

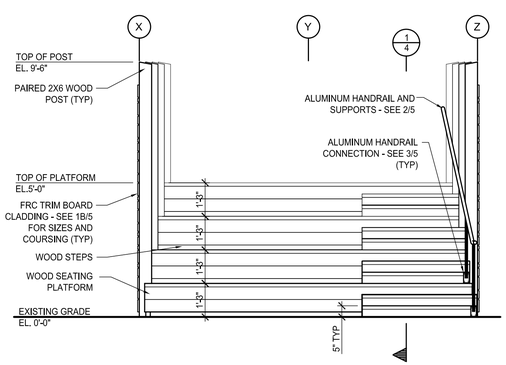

2 / 2 3 SW ELEVATION - RAMP/PLATFORM

3/8" = 1'-0"

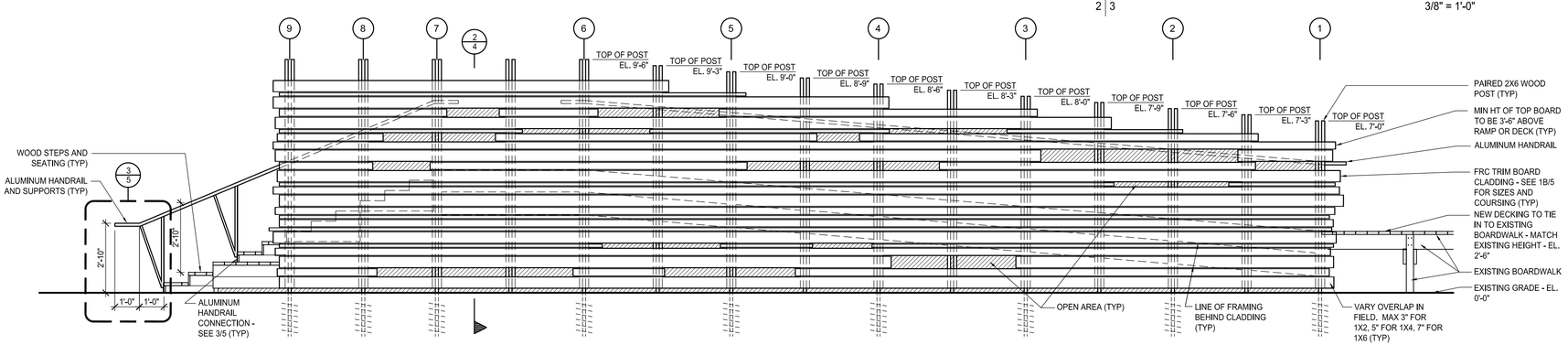

1 / 2 3 SE ELEVATION - RAMP/PLATFORM

3/8" = 1'-0"

UNABRIDGED ARCHITECTURE PLLC

ALLISON H. ANDERSON AIA
JOHN M. ANDERSON AIA

443 MAIN STREET
BAY ST LOUIS, MS 39520
228.467.1149

REGISTERED ARCHITECT Allison H. Anderson 2888 STATE OF MISSISSIPPI

EXTERIOR ELEVATIONS

GRAND BAY NERR

OUTDOOR PAVILION
MOSS POINT, MS

14 OCTOBER 2016

3

UNABRIDGED
ARCHITECTURE PLLC

ALLISON H. ANDERSON AIA
JOHN M. ANDERSON AIA

443 MAIN STREET
BAY ST LOUIS, MS 39520
228.467.1149

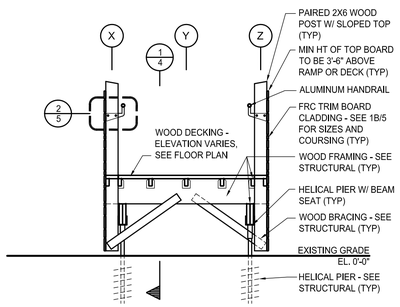

4 CROSS SECTION AT RAMP
2 | 4 3/8" = 1'-0"

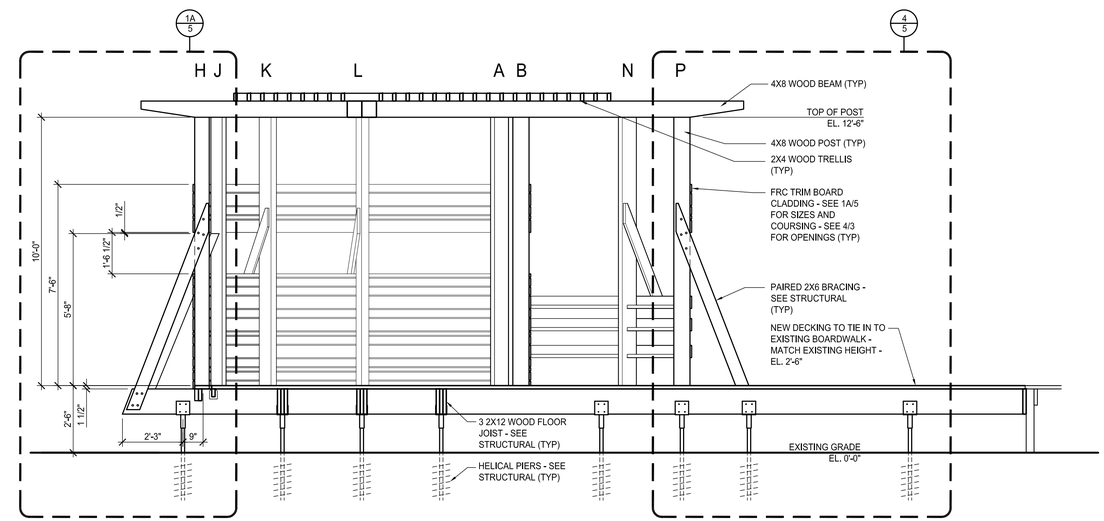

3 CROSS SECTION AT BIRD BLIND
2 | 4 3/8" = 1'-0"

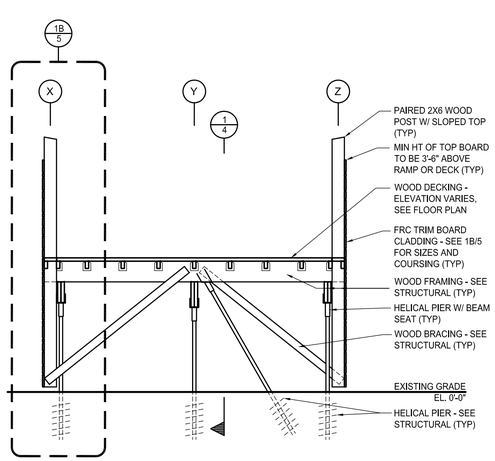

2 CROSS SECTION AT RAMP
2 | 4 3/8" = 1'-0"

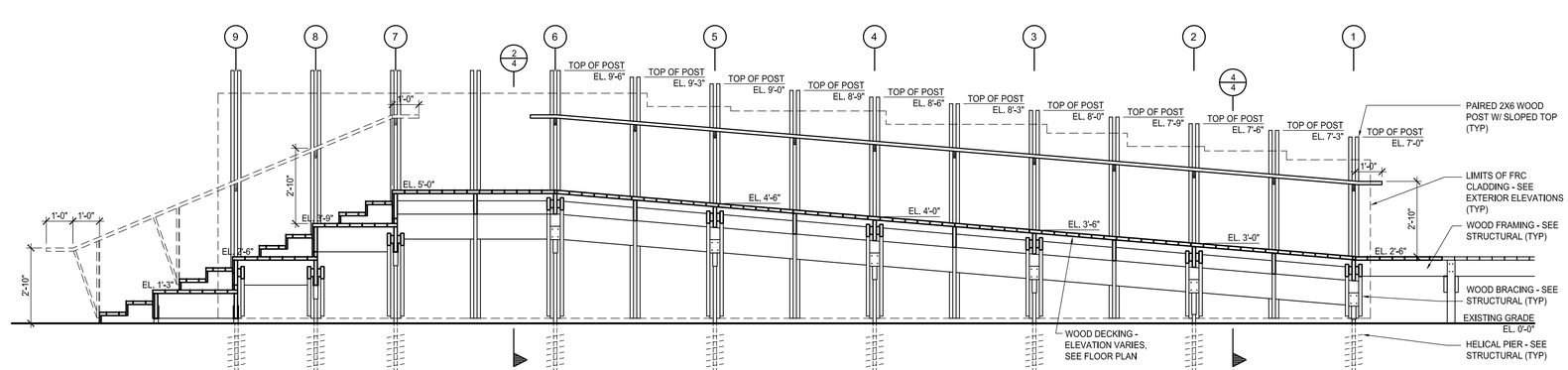

1 LONG SECTION AT RAMP
2 | 4 3/8" = 1'-0"

CROSS SECTIONS

GRAND BAY NERR
OUTDOOR PAVILION
MOSS POINT, MS

14 OCTOBER 2016

4

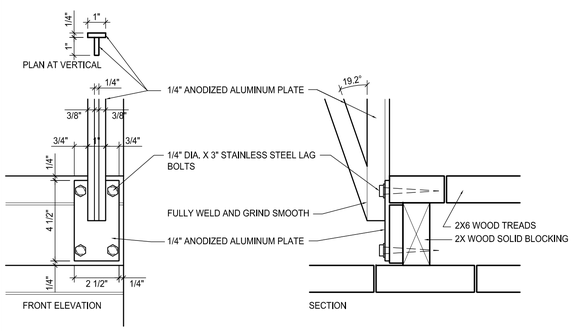

3 | 4 5 HANDRAIL DETAIL

3" = 1'-0"

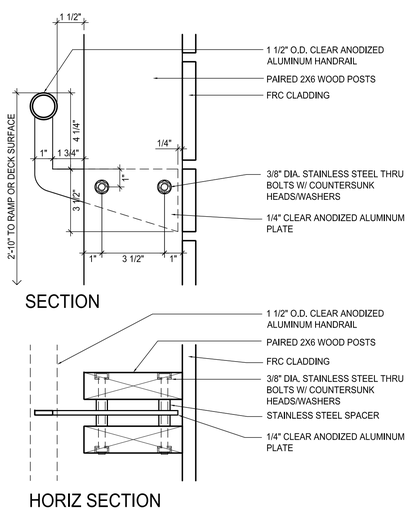

2 | 4 5 HANDRAIL DETAIL

3" = 1'-0"

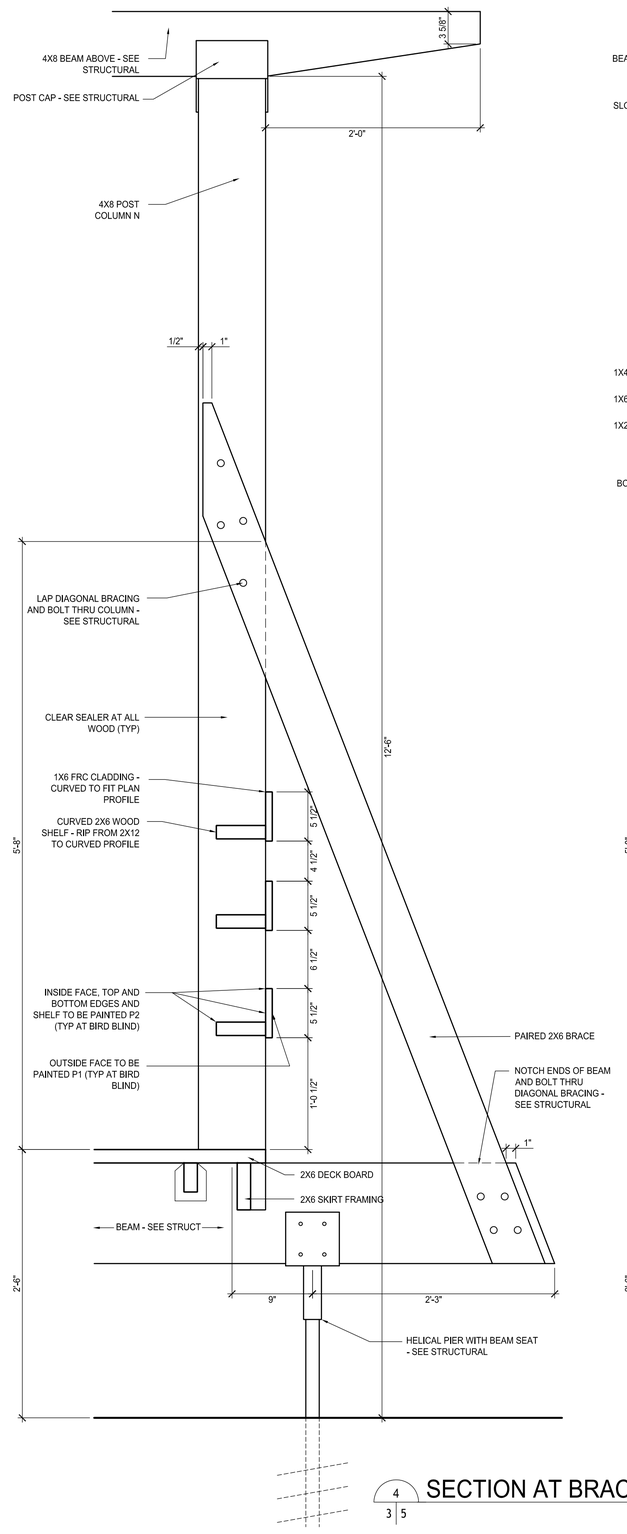

4 | 3 5 SECTION AT BRACING/SHELVING

1 1/2" = 1'-0"

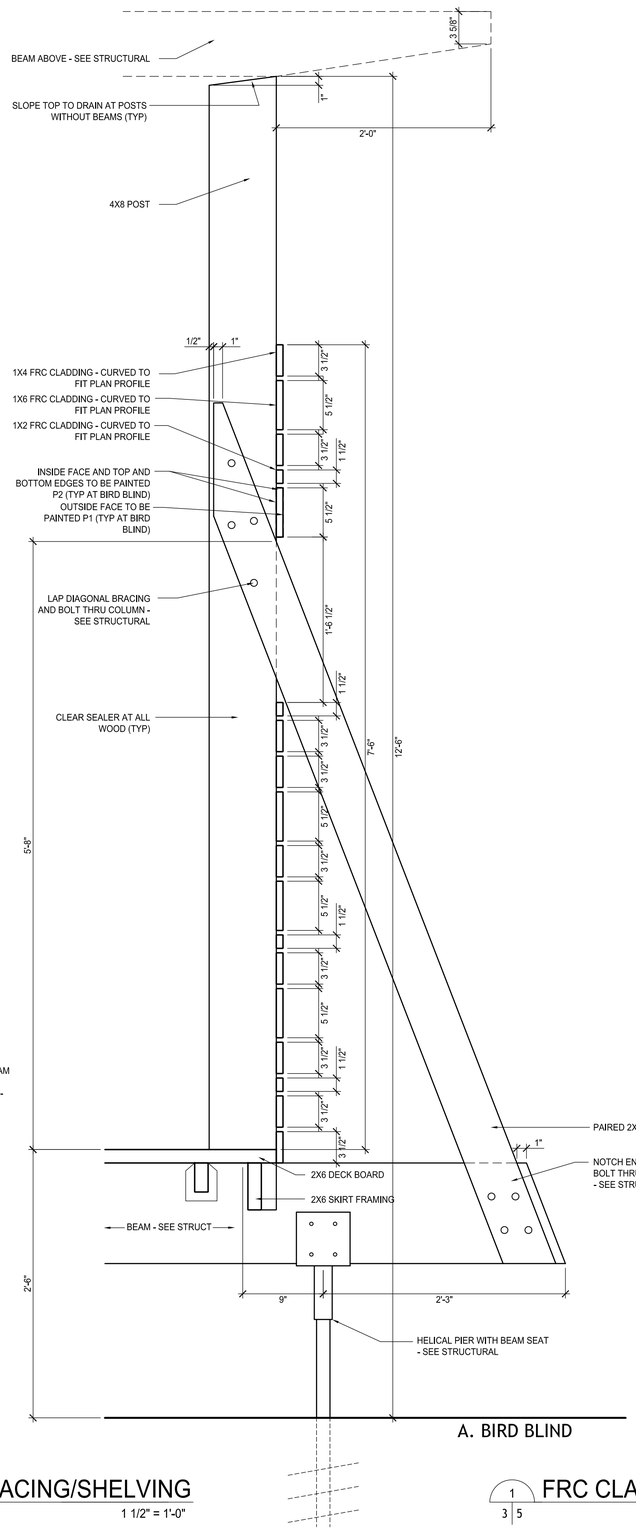

A. BIRD BLIND

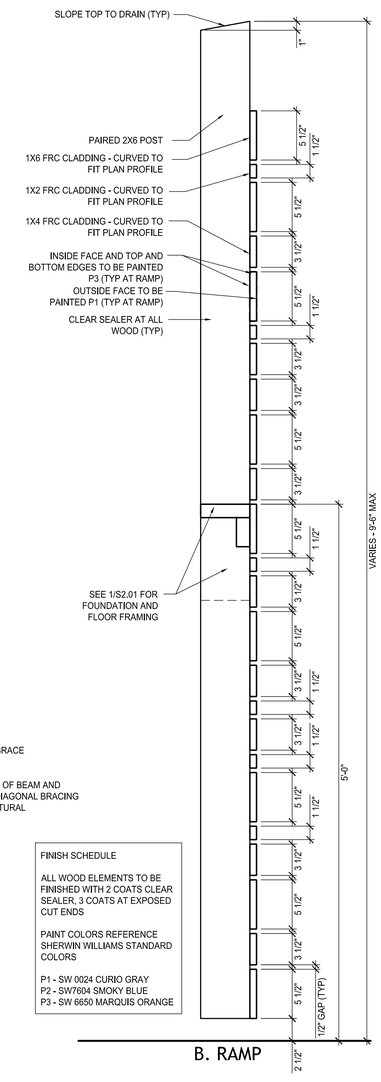

B. RAMP

FINISH SCHEDULE

ALL WOOD ELEMENTS TO BE FINISHED WITH 2 COATS CLEAR SEALER, 3 COATS AT EXPOSED CUT ENDS

PAINT COLORS REFERENCE SHERWIN WILLIAMS STANDARD COLORS

P1 - SW 0024 CURIO GRAY
P2 - SW7604 SMOKY BLUE
P3 - SW 6650 MARQUIS ORANGE

1 | 3 5 FRC CLADDING SECTION

1 1/2" = 1'-0"

UNABRIDGED ARCHITECTURE PLLC

ALLISON H. ANDERSON AIA
JOHN M. ANDERSON AIA

443 MAIN STREET
BAY ST LOUIS, MS 39520
228.467.1149

EXTERIOR DETAILS

GRAND BAY NERR

OUTDOOR PAVILION
MOSS POINT, MS

14 OCTOBER 2016

5

GENERAL NOTES

DESIGN CRITERIA FOR PRIMARY STRUCTURAL SYSTEM

1. BUILDING CODE: 2012 INTERNATIONAL BUILDING CODE

2. DESIGN LIVE LOADS:

A.	DECK FLOOR	100 PSF

3. LIVE LOADS ARE NOT REDUCED.

4. WIND LOAD DESIGN CRITERIA:

A.	RISK CATEGORY	I
B.	ULTIMATE DESIGN WIND SPEED	150 MPH
C.	NOMINAL DESIGN WIND SPEED	116 MPH
D.	EXPOSURE	C
E.	INTERNAL PRESSURE COEFFICIENT	NA

5. SEISMIC DESIGN CRITERIA:

A.	SEISMIC RISK CATEGORY	I
B.	IMPORTANCE FACTOR	1.0
C.	SPECTRAL RESPONSE ACCELERATIONS:	
	Ss	0.10 G
	S1	0.06 G
D.	SITE CLASS	D
E.	SPECTRAL RESPONSE COEFFICIENTS:	
	Sds	0.107
	Sd1	0.096
F.	SEISMIC DESIGN CATEGORY	B
G.	BASIC SEISMIC-FORCE-RESISTING SYSTEM:	TIMBER FRAMES
H.	SEISMIC RESPONSE COEFFICIENT, Cs	0.07
I.	RESPONSE MODIFICATION FACTOR, R	1.5
J.	BASE SHEAR,	2.0 PSF
K.	ANALYSIS METHOD	EQUIV LATERAL FORCE

6. GROUND SNOW LOAD 0 PSF

DRAWINGS

1. ANY BACKGROUND DRAWINGS SHOWN ON THE STRUCTURAL PLANS ARE FOR REFERENCE ONLY. SEE ARCHITECTURAL AND OTHER DRAWINGS FOR ACTUAL REQUIREMENTS OF NON-STRUCTURAL ELEMENTS.

2. STRUCTURAL DRAWINGS SHOW ELEVATIONS AND RELATIONSHIPS OF STRUCTURAL ELEMENTS IN THEIR FINAL POSITION. CONSTRUCTION MEANS AND METHODS SHALL ALLOW FOR CAMBERS, LOSS OF CAMBER DURING CONSTRUCTION LOADING, DEFLECTIONS, AND NORMAL MOVEMENTS OF STRUCTURAL ELEMENTS DURING CONSTRUCTION.

3. SECTIONS AND DETAILS INDICATED AS TYPICAL SECTIONS AND TYPICAL DETAILS SHALL BE USED AT ALL LOCATIONS WHERE CONDITIONS ARE SIMILAR TO THOSE DESCRIBED IN THE DETAILS.

EXISTING CONDITIONS

1. FIELD VERIFY ALL EXISTING DIMENSIONS AND CONDITIONS PRIOR TO START OF SHOP DRAWINGS OR CONSTRUCTION. WHERE INDICATED ON DRAWINGS, SUBMIT RECORD OF FIELD CONDITIONS TO ARCHITECT.

2. EXISTING CONDITIONS REQUIRING MODIFICATIONS TO DOCUMENTS FOR PROPOSED CONSTRUCTION SHALL BE IMMEDIATELY SUBMITTED TO ARCHITECT.

SUBMITTALS

1. REVIEW OF SUBMITTAL INFORMATION SHALL BE FOR GENERAL REQUIREMENTS OF PROJECT; AND SHALL NOT INCLUDE CHECKING OF DETAILED DIMENSIONS OR DETAILED QUANTITIES, NOR REVIEW OF THE CONTRACTOR'S SAFETY MEASURES IN, ON, OR NEAR THE WORK SITE, OR MEANS AND METHODS OF DOING WORK.

2. CONTRACTOR SHALL CHECK ALL SHOP DRAWING SUBMITTALS FOR COMPLIANCE WITH CONTRACT DOCUMENTS.

3. CONTRACTOR SHALL INDICATE CHECKING AND APPROVAL OF SHOP DRAWINGS BY AFFIXING HIS SHOP DRAWING STAMP WITH THE DATE OF APPROVAL AND NAME OF PERSON APPROVING SHOP DRAWINGS.

4. CONSTRUCTION SCHEDULE SHALL ALLOW 2 WEEKS FOR SHOP DRAWING REVIEW AND RETURN BY THE STRUCTURAL ENGINEER. REVIEW BY THE DESIGN TEAM SHALL BE FOR GENERAL COMPLIANCE WITH THE COMPLIANCE WITH THE CONTRACT DOCUMENTS.

5. CONTRACTOR SHALL BE RESPONSIBLE FOR ALL QUANTITIES, DIMENSIONS, CONSTRUCTION MEANS, METHODS, AND JOB SITE SAFETY.

6. ACTIONS TAKEN ON THE SHOP DRAWINGS SHALL NOT RELIEVE THE CONTRACTOR FROM RESPONSIBILITY OF COMPLIANCE WITH CONTRACT DOCUMENTS.

FIRE RESISTANCE OF STRUCTURAL ELEMENTS

1. THE STRUCTURE IS NOT FIRE RATED.

HELICAL PILES

1. HELICAL PILES SHALL BE DESIGNED AND INSTALLED BY CONTRACTOR FOR LOADS AND AT LOCATIONS INDICATED ON DRAWINGS.

2. HELICAL PILES SHALL HAVE THE FOLLOWING MINIMUM FACTORS OF SAFETY:

   A. GRAVITY LOADS: 2.0
   B. LOADS WITH NET TENSION: 2.0

3. HELICAL PILES SHALL BE DESIGNED AND INSTALLED TO HAVE THE FOLLOWING MAXIMUM MOVEMENT AT PILE HEAD:

   A. LONG TERM PERMANENT SETTLEMENT: 1/2"
   B. LATERAL MOVEMENT DUE TO SPECIFIED LATERAL LOADS: 3/4".

STRUCTURAL STEEL ELEMENTS

1. ALL STRUCTURAL STEEL PLATES, ANGLES AND CONNECTION MATERIALS SHALL CONFORM TO ASTM A36 AND SHALL BE GALVANIZED PER ASTM 153.

2. ALL BOLTS SHALL BE GALVANIZED ASTM A307. PROVIDE WASHERS UNDER ALL NUTS AND HEADS.

WOOD FRAMING NOTES

1. DIMENSION LUMBER USED FOR STRUCTURAL FRAMING SHALL BE KILN DRIED, VISUALLY GRADED No. 2 GRADE SOUTHERN PINE WITH AN ALLOWABLE BENDING STRESS OF 1,500 PSI, MINIMUM; 175 PSI IN HORIZONTAL SHEAR; AND SHALL HAVE A MODULUS OF ELASTICITY OF 1,600,000 PSI FOR NORMAL LOAD DURATION AND DRY SERVICE CONDITIONS..

2. NAILING OF FRAMING MEMBERS SHALL BE IN ACCORDANCE WITH THE REQUIREMENTS OF THE UNIFORM BUILDING CODE, U.N.O.

3. CONNECTORS FOR WOOD FLOOR JOISTS TO SUPPORTING BEAMS SHALL BE "SIMPSON STRONG-TIE CONNECTORS" OR EQUAL. TYPE OF CONNECTORS AND INSTALLATION SHALL BE AS RECOMMENDED BY THE MANUFACTURER FOR SEVERE EXPOSURE, U.N.O.

4. MULTIPLE MEMBER WOOD BEAMS SHALL BE BOLTED TOGETHER WITH ONE 3/4" DIAMETER BOLT TOP AND BOTTOM OVER ALL SUPPORTS AND/OR AT ENDS OF BEAM IN ADDITION, PROVIDE 1/2" DIAMETER BOLTS AT 2'-0" ON CENTER STAGGERED (TOP AND BOTTOM) FULL LENGTH OF BEAM.

5. MULTIPLE MEMBER WOOD COLUMNS SHALL BE BOLTED TOGETHER WITH TWO 3/4" DIAMETER BOLTS TOP AND BOTTOM AND TWO 1/2" DIAMETER BOLTS AT THIRD HEIGHT OF THE COLUMN, U.N.O.

6. BEAM-TO-COLUMN CONNECTIONS SHALL BE WITH "SIMPSON STRONG TIE", METAL COLUMN CAPS, NAILED FOR BEAMS 2 INCHES IN WIDTH OR LESS, AND BOLTED FOR BEAMS GREATER THAN 2 INCHES IN WIDTH.

7. PROVIDE MINIMUM OF 3" BEARING AT EACH END OF BEAMS BEARING ON HELICAL PILE CONNECTOR SHOE. TWO BEAMS BEARING ON ONE HELICAL PILE CONNECTOR SHOE SHALL BEAR SYMMETRICALLY ABOUT THE CENTER OF THE PILE. SINGLE BEAMS BEARING ON A SINGLE PILE CONNECTOR SHOE SHALL EXTEND ACROSS THE FULL WIDTH OF THE SHOE.

8. ERECT ALL DIMENSION LUIMBER AND TIMBER FRAMING WITH NATURAL CROWN UP.

UNABRIDGED ARCHITECTURE PLLC

ALLISON H. ANDERSON AIA
JOHN M. ANDERSON AIA

443 MAIN STREET
BAY ST LOUIS, MS 39520
228.467.1149

THE SEAL APPEARING ON THIS DRAWING WAS AUTHORIZED BY TOM R. HERRIN, P.E. #17438 ON 10/14/2016

BALDAUF ■ HERRIN & ASSOCIATES, INC.
9696 Skillman St. Suite 270
Dallas, TX 75243
214-341-4850 fax
214-341-7575 vox
BHA #2016037

GENERAL NOTES

GRAND BAY NERR

OUTDOOR PAVILION
MOSS POINT, MS

10/14/2016

S1.01

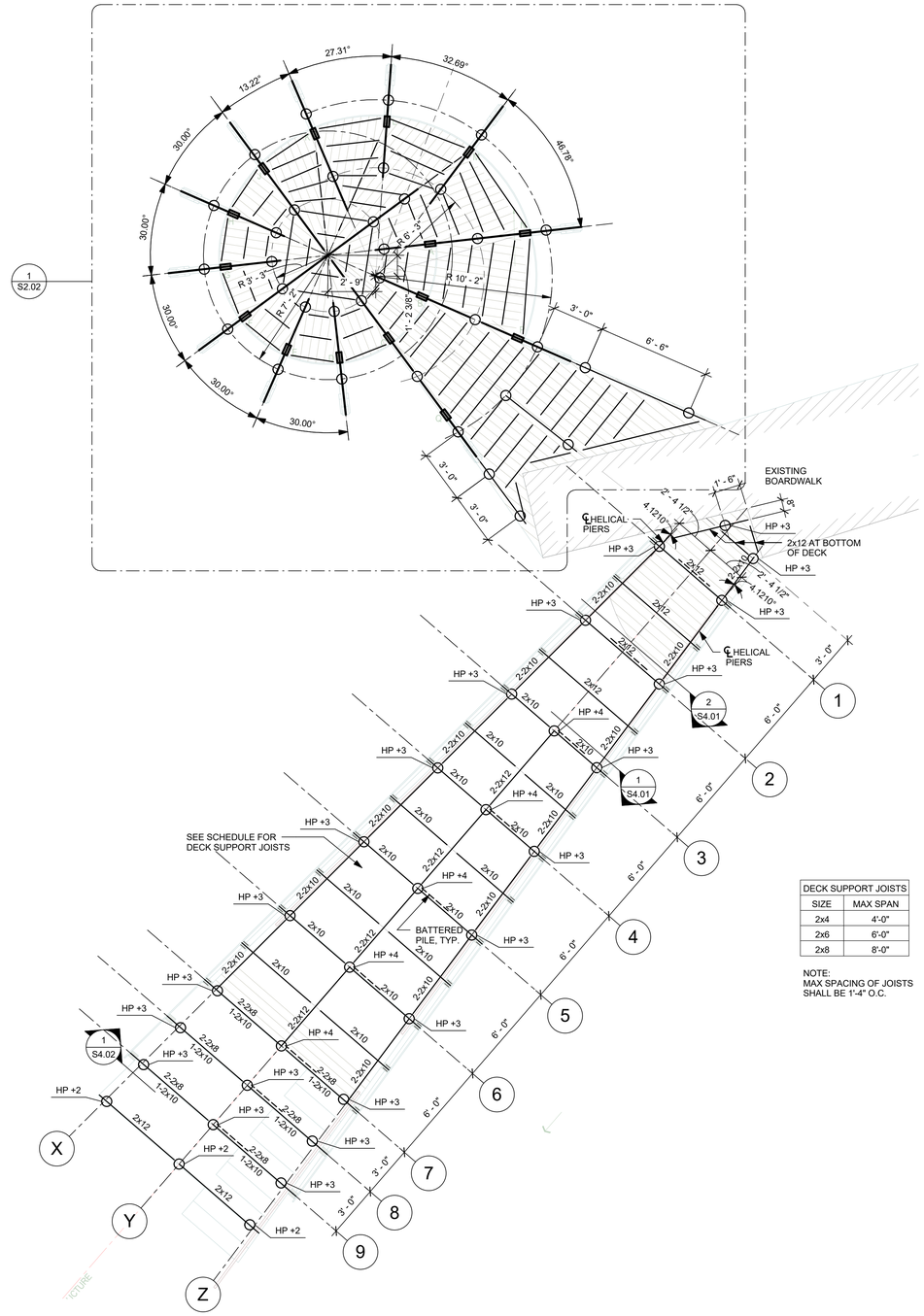

DECK SUPPORT JOISTS	
SIZE	MAX SPAN
2x4	4'-0"
2x6	6'-0"
2x8	8'-0"

NOTE:
MAX SPACING OF JOISTS SHALL BE 1'-4" O.C.

1 FOUNDATION AND FRAMING PLAN
1/4" = 1'-0"

PLAN NOTES:

1. SEE ARCHITECTURAL FOR ELEVATIONS AND DIMENSIONS NOT SHOWN.

HP X — REQUIRED SERVICE LOAD CAPACITY (KIPS)
+ INDICATES DOWNWARD LOAD
- INDICATES UPLIFT LOAD

HELICAL PIER LEGEND

UNABRIDGED ARCHITECTURE PLLC

ALLISON H. ANDERSON AIA
JOHN M. ANDERSON AIA

443 MAIN STREET
BAY ST LOUIS, MS 39520
228.467.1149

TOM R. HERRIN
LICENSED PROFESSIONAL ENGINEER
17438
STATE OF MISSISSIPPI

THE SEAL APPEARING ON THIS DRAWING WAS AUTHORIZED BY TOM R. HERRIN, P.E. #17438 ON 10/14/2016

BALDAUF ■ HERRIN & ASSOCIATES, INC.
9696 Skillman St. Suite 270
Dallas, TX 75243
214-341-4850 fax
214-341-7575 vox
BHA #2016037

FOUNDATION AND FRAMING PLAN

GRAND BAY NERR

OUTDOOR PAVILION
MOSS POINT, MS

10/14/2016

S2.01

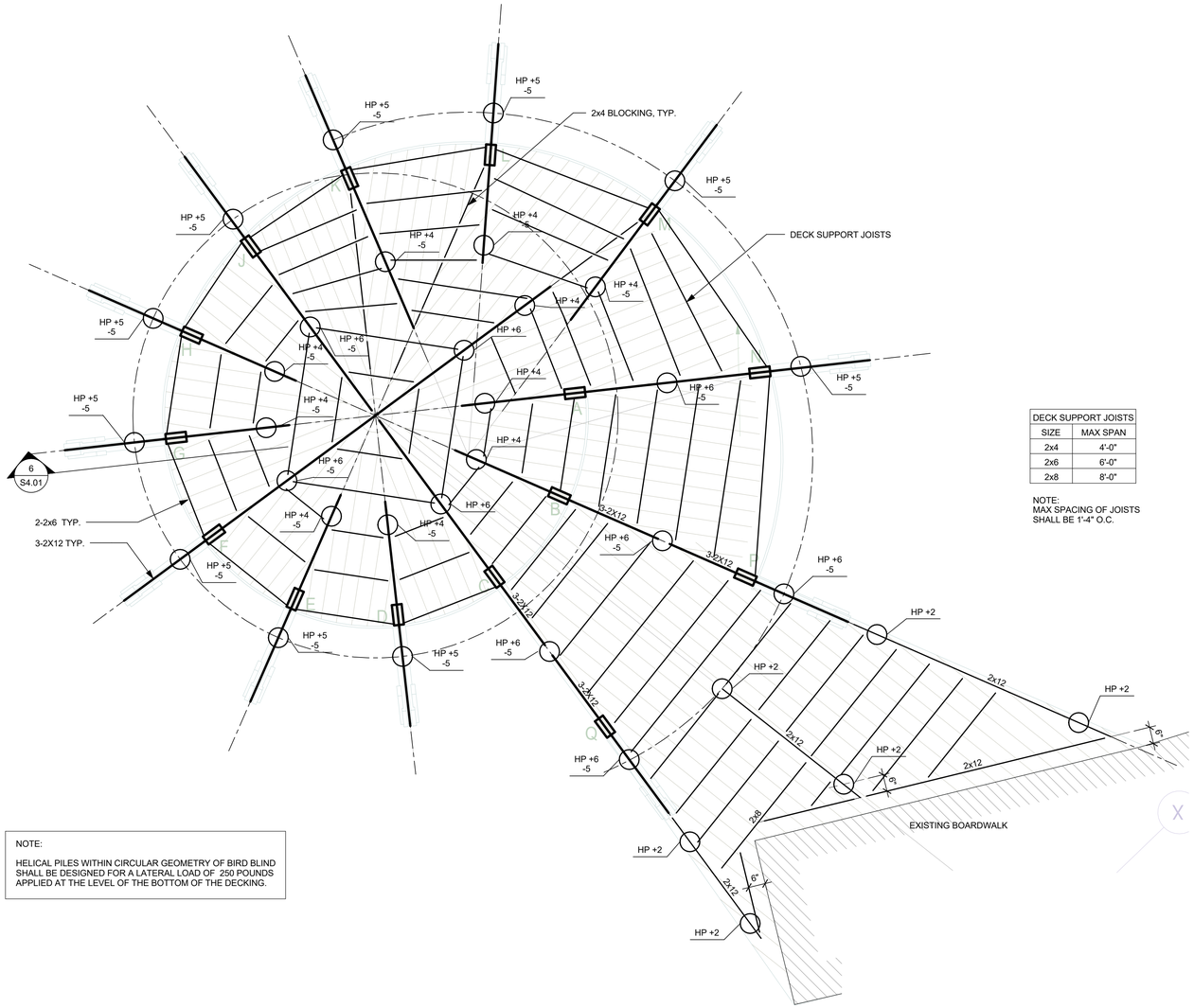

DECK SUPPORT JOISTS	
SIZE	MAX SPAN
2x4	4'-0"
2x6	6'-0"
2x8	8'-0"

NOTE:
MAX SPACING OF JOISTS SHALL BE 1'-4" O.C.

NOTE:

HELICAL PILES WITHIN CIRCULAR GEOMETRY OF BIRD BLIND SHALL BE DESIGNED FOR A LATERAL LOAD OF 250 POUNDS APPLIED AT THE LEVEL OF THE BOTTOM OF THE DECKING.

1 BIRD BLIND ENLARGED PLAN
1/2" = 1'-0"

PLAN NOTES:

1. SEE ARCHITECTURAL FOR ELEVATIONS AND DIMENSIONS NOT SHOWN.

HP X
REQUIRED SERVICE LOAD CAPACITY (KIPS)
+ INDICATES DOWNWARD LOAD
- INDICATES UPLIFT LOAD

HELICAL PIER LEGEND

UNABRIDGED ARCHITECTURE PLLC
ALLISON H. ANDERSON AIA
JOHN M. ANDERSON AIA
443 MAIN STREET
BAY ST LOUIS, MS 39520
228.467.1149

TOM R. HERRIN
LICENSED PROFESSIONAL ENGINEER
17438
STATE OF MISSISSIPPI

THE SEAL APPEARING ON THIS DRAWING WAS AUTHORIZED BY TOM R. HERRIN, P.E. #17438 ON 10/14/2016

BALDAUF ■ HERRIN & ASSOCIATES, INC.
9696 Skillman St. Suite 270
Dallas, TX 75243
214-341-4850 fax
214-341-7575 vox
BHA #2016037

ENLARGED PLAN

GRAND BAY NERR

OUTDOOR PAVILION
MOSS POINT, MS

10/14/2016

S2.02

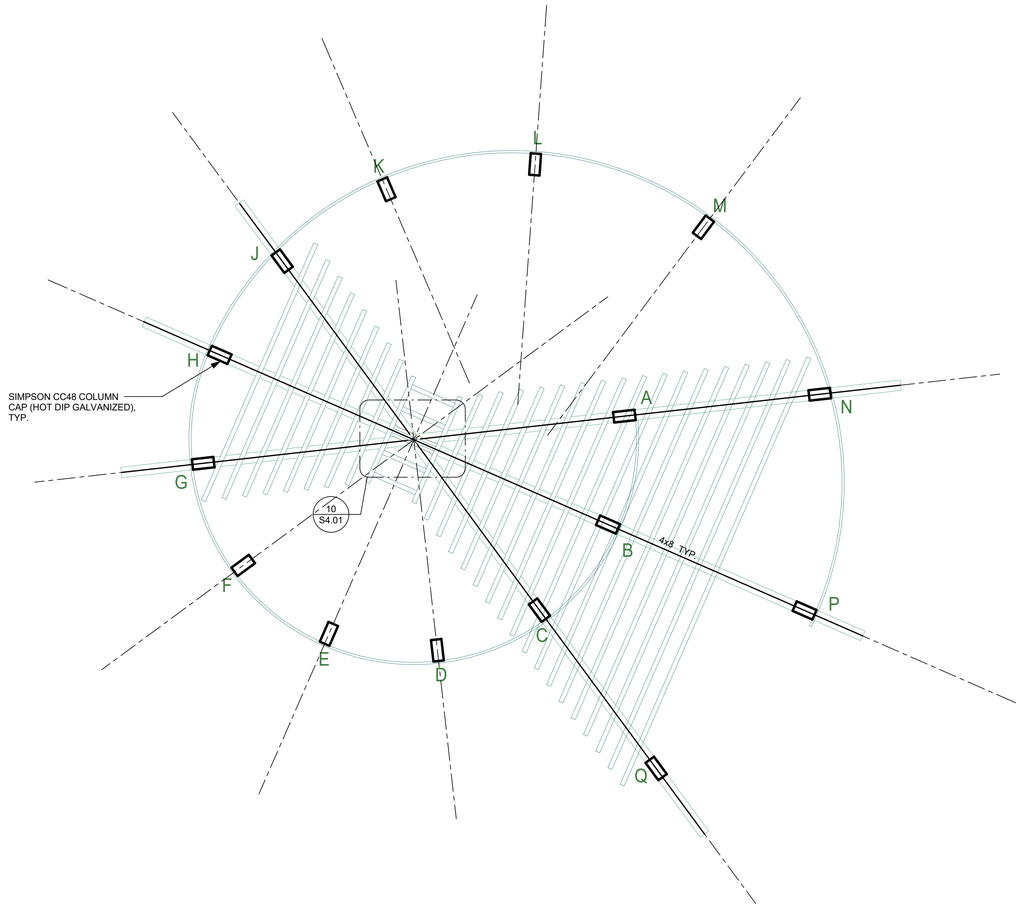

1 TRELLIS FRAMING PLAN
1/2" = 1'-0"

PLAN NOTES:

1. SEE ARCHITECTURAL FOR ELEVATIONS AND DIMENSIONS NOT SHOWN.

UNABRIDGED ARCHITECTURE PLLC

ALLISON H. ANDERSON AIA
JOHN M. ANDERSON AIA

443 MAIN STREET
BAY ST LOUIS, MS 39520
228.467.1149

TOM R. HERRIN
LICENSED PROFESSIONAL ENGINEER
17438
STATE OF MISSISSIPPI

THE SEAL APPEARING ON THIS DRAWING WAS AUTHORIZED BY TOM R. HERRIN, P.E. #17438 ON 10/14/2016

BALDAUF ■ HERRIN & ASSOCIATES, INC.

9696 Skillman St. Suite 270
Dallas, TX 75243

214-341-4850 fax
214-341-7575 vox
BHA #2016037

TRELLIS FRAMING PLAN

GRAND BAY NERR

OUTDOOR PAVILION
MOSS POINT, MS

10/14/2016

S2.03

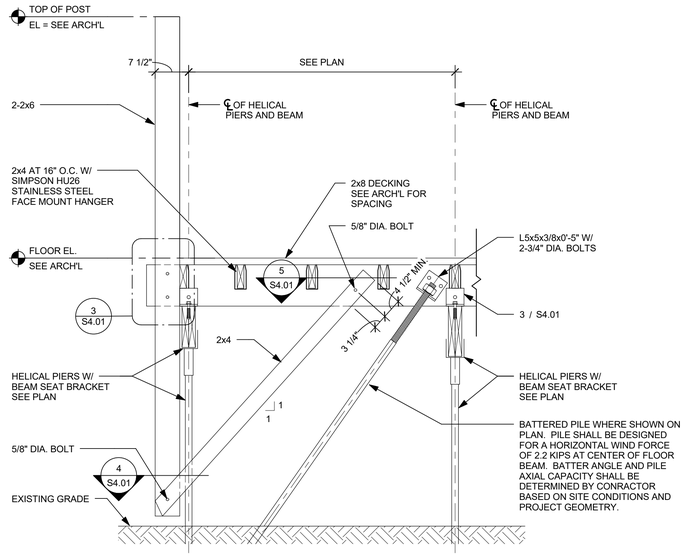

1 SECTION
3/4" = 1'-0"

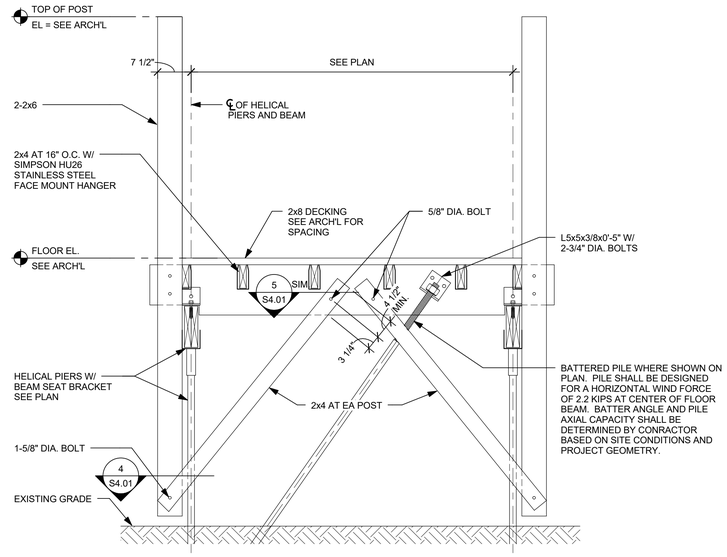

2 SECTION
3/4" = 1'-0"

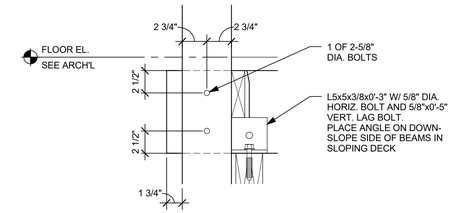

3 SECTION
1 1/2" = 1'-0"

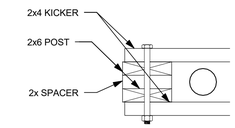

4 SECTION
1 1/2" = 1'-0"

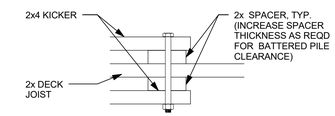

5 SECTION
1 1/2" = 1'-0"

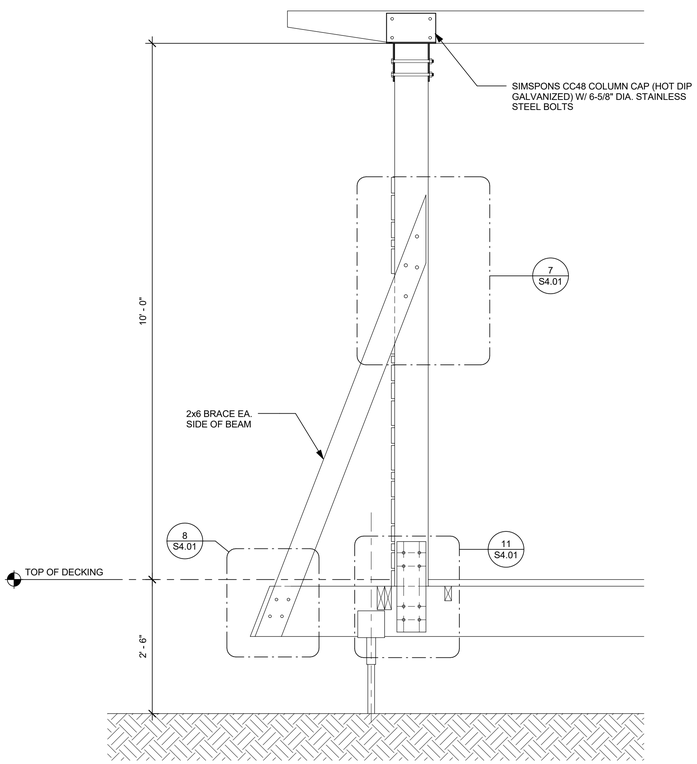

6 SECTION
3/4" = 1'-0"

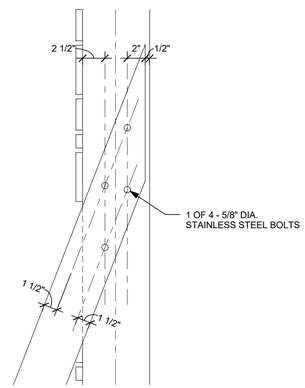

7 SECTION
1 1/2" = 1'-0"

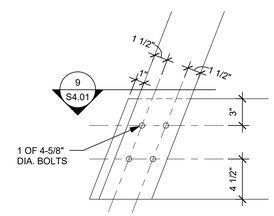

8 SECTION
1 1/2" = 1'-0"

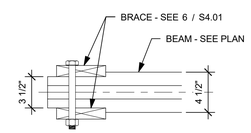

9 PLAN
1 1/2" = 1'-0"

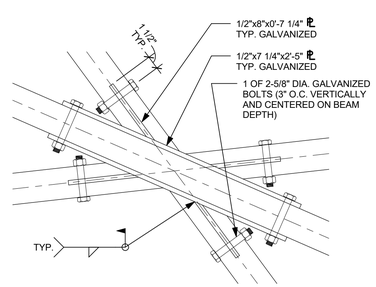

10 PLAN
1 1/2" = 1'-0"

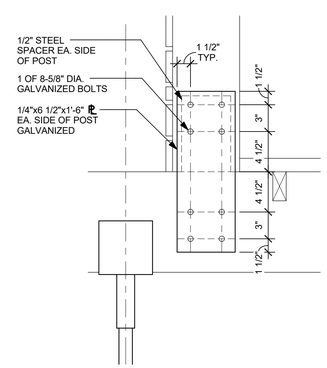

11 SECTION
1 1/2" = 1'-0"

UNABRIDGED ARCHITECTURE PLLC

ALLISON H. ANDERSON AIA
JOHN M. ANDERSON AIA

443 MAIN STREET
BAY ST LOUIS, MS 39520
228.467.1149

TOM R. HERRIN
LICENSED PROFESSIONAL ENGINEER
17438
STATE OF MISSISSIPPI

THE SEAL APPEARING ON THIS DRAWING WAS AUTHORIZED BY TOM R. HERRIN, P.E. #17438 ON 10/14/2016

BALDAUF ■ HERRIN & ASSOCIATES, INC.
9696 Skillman St. Suite 270
Dallas, TX 75243
214-341-4850 fax
214-341-7575 vox
BHA #2016037

SECTIONS AND DETAILS

GRAND BAY NERR

OUTDOOR PAVILION
MOSS POINT, MS

10/14/2016

S4.01

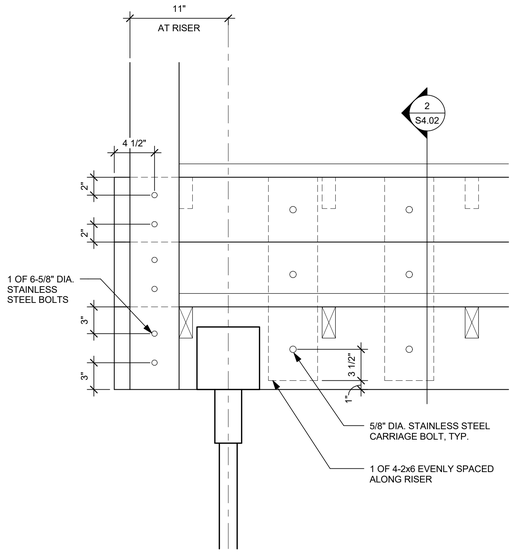

1 SECTION
1 1/2" = 1'-0"

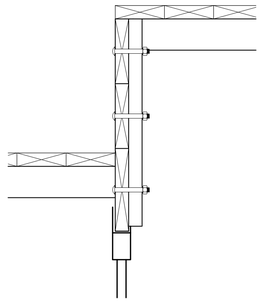

2 SECTION
1 1/2" = 1'-0"

UNABRIDGED ARCHITECTURE PLLC

ALLISON H. ANDERSON AIA
JOHN M. ANDERSON AIA

443 MAIN STREET
BAY ST LOUIS, MS 39520
228.467.1149

TOM R. HERRIN
LICENSED PROFESSIONAL
ENGINEER
17438
STATE OF MISSISSIPPI

THE SEAL APPEARING ON THIS DRAWING WAS AUTHORIZED BY TOM R. HERRIN, P.E. #17438 ON 10/14/16

BALDAUF ■ HERRIN & ASSOCIATES, INC.
9696 Skillman St. Suite 270
Dallas, TX 75243
214-341-4850 fax
214-341-7575 vox
BHA #2016037

SECTIONS AND DETAILS

GRAND BAY NERR

OUTDOOR PAVILION
MOSS POINT, MS

10/14/16

S4.02