COMPTON ENGINEERING, INC.
ENGINEERING, SURVEYING & ENVIRONMENTAL SERVICES

3036 Longfellow Drive
P.O. Box 2795
Bay St. Louis, MS 39521

Phone: 228.467.2770
Fax: 228.467.2720

comptonengineering.com

PASCAGOULA
BILOXI
BAY ST. LOUIS

TRANSMITTAL

Date: December 30, 2016

Total No. of Pages: 4
(including this cover)

To: All Planholders

From: James Buras
Project Engineer

Re: Boat Lifts at the Ocean Springs Harbor

Attached herewith is Addendum No. 2 for the above referenced project.

PLEASE ACKNOWLEDGE YOUR RECEIPT OF THIS ADDENDUM BY COMPLETING THE ACKNOWLEDGEMENT BELOW AND FAXING THIS PAGE ONLY TO (228) 769-9079. Acknowledgement of this addendum on Page 8 of Division 0, Section 00300 Proposal Form is also required.

If you have any questions regarding this addendum, please call me at (228) 762-3970.

ACKNOWLEDGEMENT FORM

ADDENDUM NO. 2

FOR

BOAT LIFTS AT THE OCEAN SPRINGS HARBOR

TO: Compton Engineering, Inc.
1706 Convent Avenue
Pascagoula, MS 39567

Telephone: (228) 762-3970
Facsimile: (228) 769-9079

We hereby acknowledge receipt of Addendum No. 2 for the above referenced project. We will ensure that Addendum No. 2 is acknowledged in the bid submitted by our company.

Print name of company: _____

Print name of person acknowledging receipt of addendum: _____

Signature of person acknowledging receipt of addendum: _____

Date of acknowledgement: _____

SECTION 00901-02
ADDENDUM NO. 2

Date: December 30, 2016

Project:	Owner:	Engineer's Project No.:
Boat Lifts at the Ocean Springs Harbor	Mississippi Department of Marine Resources	216-015

The following changes, additions, and/or deletions are hereby made a part of the Project Manual for the Boat Lifts at the Ocean Springs Harbor for the Mississippi Department of Marine Resources dated July 2016 as fully and completely as if the same were fully and completely set forth therein:

VOLUME 2 – PROJECT DRAWINGS

1. SHEET S2.2

   Delete Sheet S2.2 in the project manual and replace with **Attachment #1 to Addendum #2.**
   Notable Changes:
   a. Pile top plate is to be cast in place with Nelson Studs.
   b. Weld column plate to pile plate after driving piles.
   c. Cross-brace rods are to 1 inch diameter.
2. SHEET S3.1

   Delete Sheet S3.1 in the project manual and replace with **Attachment #2 to Addendum #2.**
   Notable Changes:
   a. Pile load tests will not be performed.

All bidders shall acknowledge receipt and acceptance of this Addendum No. 1 consisting of one (1) page plus attachments by signing the acknowledgement form preceding this addendum and also acknowledging the addendum on Page 8 of Division 0, Section 00300 Proposal Form. Bids submitted without acknowledging receipt of the addendum may be considered non-responsive.

Sincerely,

MISSISSIPPI DEPARTMENT OF MARINE RESOURCES

By: _____
James Buras, Project Engineer

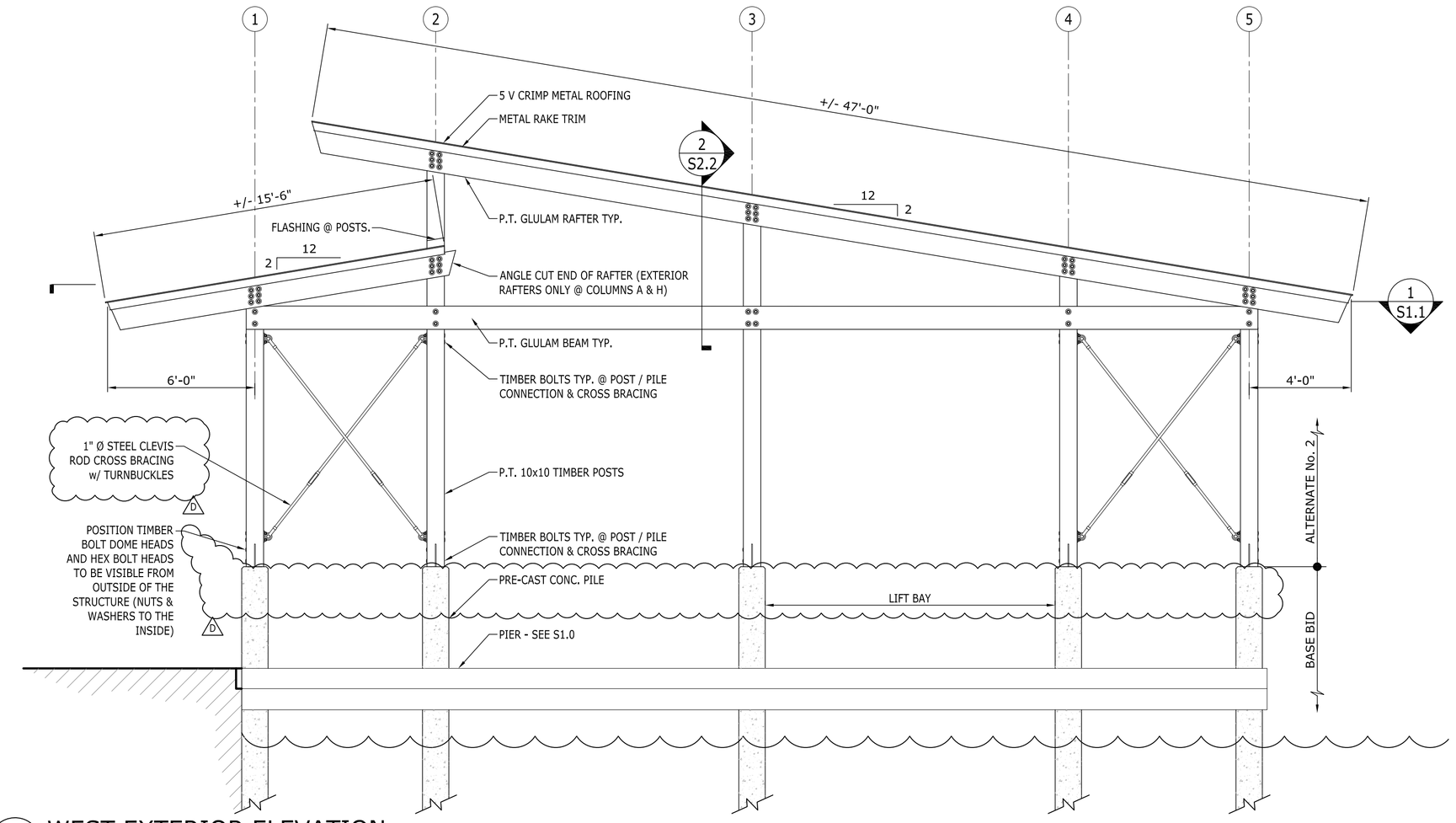

1 WEST EXTERIOR ELEVATION (EAST ELEVATION SIMILAR)
SCALE: 1/4" = 1'-0"

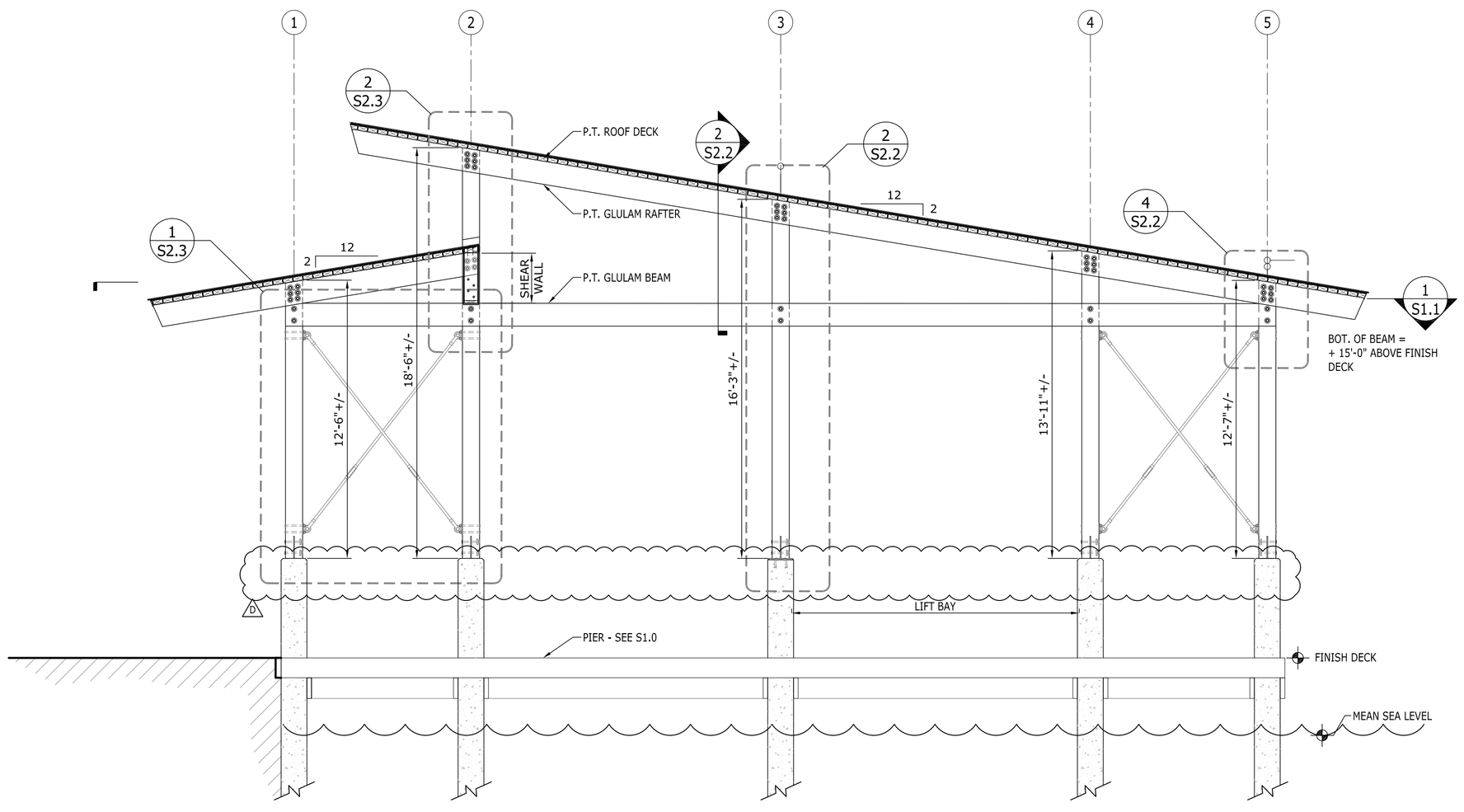

3 BUILDING SECTION
SCALE: 1/4" = 1'-0"

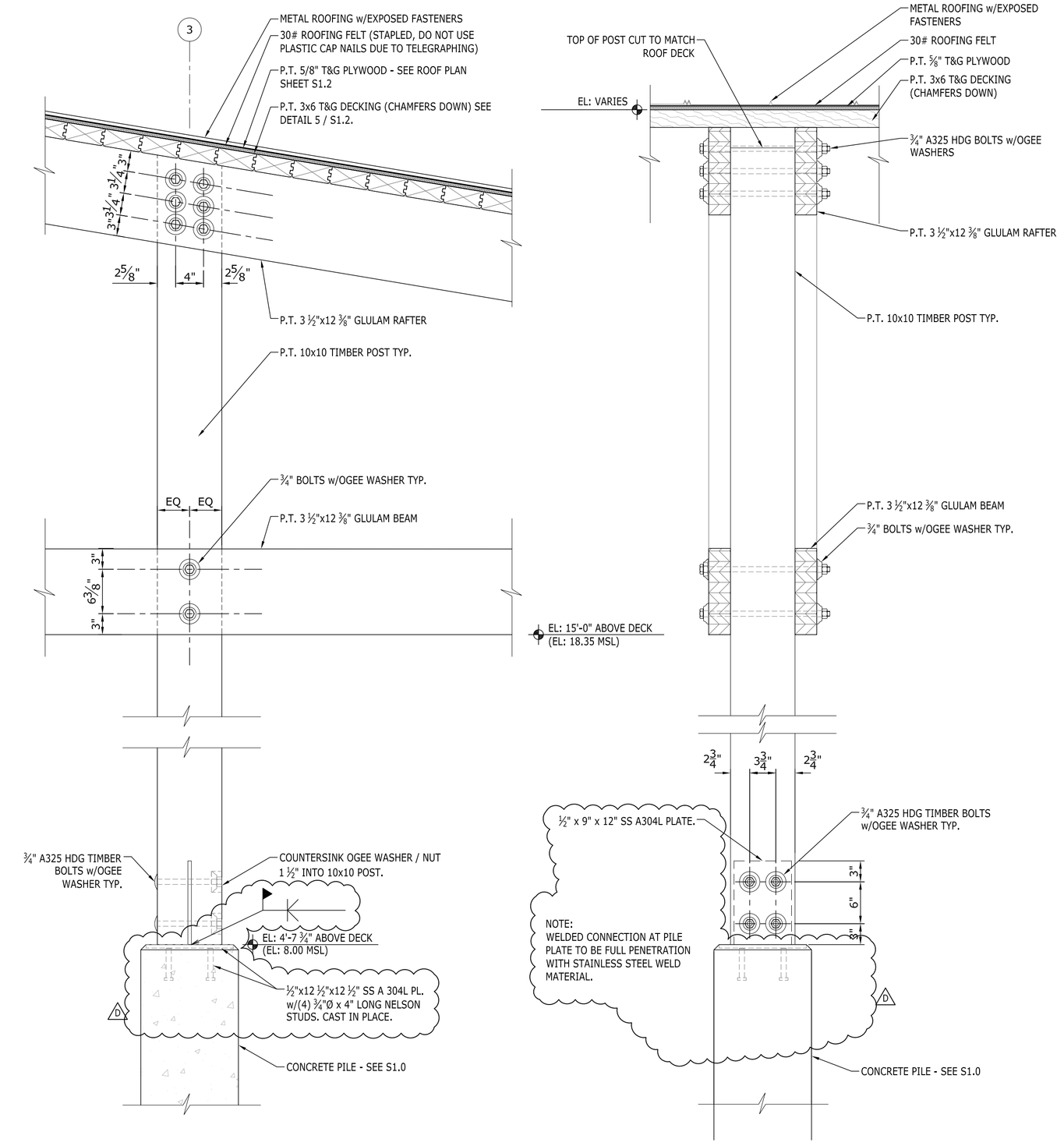

2 BEAM, RAFTER, POST & PILE CONNECTIONS DETAIL
SCALE: 1" = 1'-0"

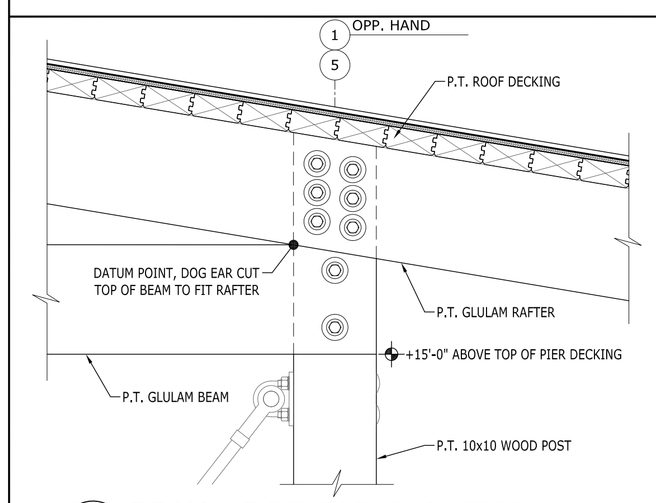

4 BEAM - DOG EAR @ RAFTER
SCALE: 1" = 1'-0"

ATTACHMENT #1 TO ADDENDUM #2

Rev. No. D

PROPRIETARY RIGHTS CLAUSE: INFORMATION AND DATA CONTAINED ON THIS DRAWING IS CONFIDENTIAL. IF GIVEN TO AN ENTITY NOT HAVING A CONTRACTUAL RELATIONSHIP WITH THE ENGINEER, THE INFORMATION SHALL NOT BE USED WITHOUT PRIOR WRITTEN PERMISSION. THIS LEGEND SHALL BE MARKED ON ANY REPRODUCTIONS HEREOF IN WHOLE OR IN PART. COMPTON ENGINEERING, INC. © COPYRIGHT 2009.

	DATE	DESCRIPTION	BY	APVD
A	10/14/16	ISSUED FOR BID	DBE	GJD
B	10/17/16	ISSUED FOR BID	DBE	GJD
C	12/01/16	ISSUED FOR BID	DBE	GJD
D	12/30/16	ISSUED FOR ADDENDUM #2	DBE	JAB

COMPTON ENGINEERING, INC.
Engineering, Surveying, and Environmental Services
1706 Convent Avenue
Pascagoula, Mississippi 39567
Phone: (228) 762-3970 Fax: (228) 769-9790
E-mail: compton@comptonengineering.com

MISSISSIPPI DEPARTMENT OF MARINE RESOURCES
BOAT LIFTS AT THE OCEAN SPRINGS HARBOR

ALTERNATE #2
EXTERIOR ELEVATIONS, SECTIONS & DETAILS

SCALE: AS NOTED
JOB NO.: 216-015
DATE: JULY 2016
DSGN.: GJD
DWG. BY: DBE
CHK.:
APVD.: JAB

VERIFY SCALES
BAR IS ONE INCH ON ORIGINAL DRAWING. IF NOT ONE INCH ON THIS SHEET ADJUST SCALES ACCORDINGLY.
0 1"

S2.2
SHEET OF

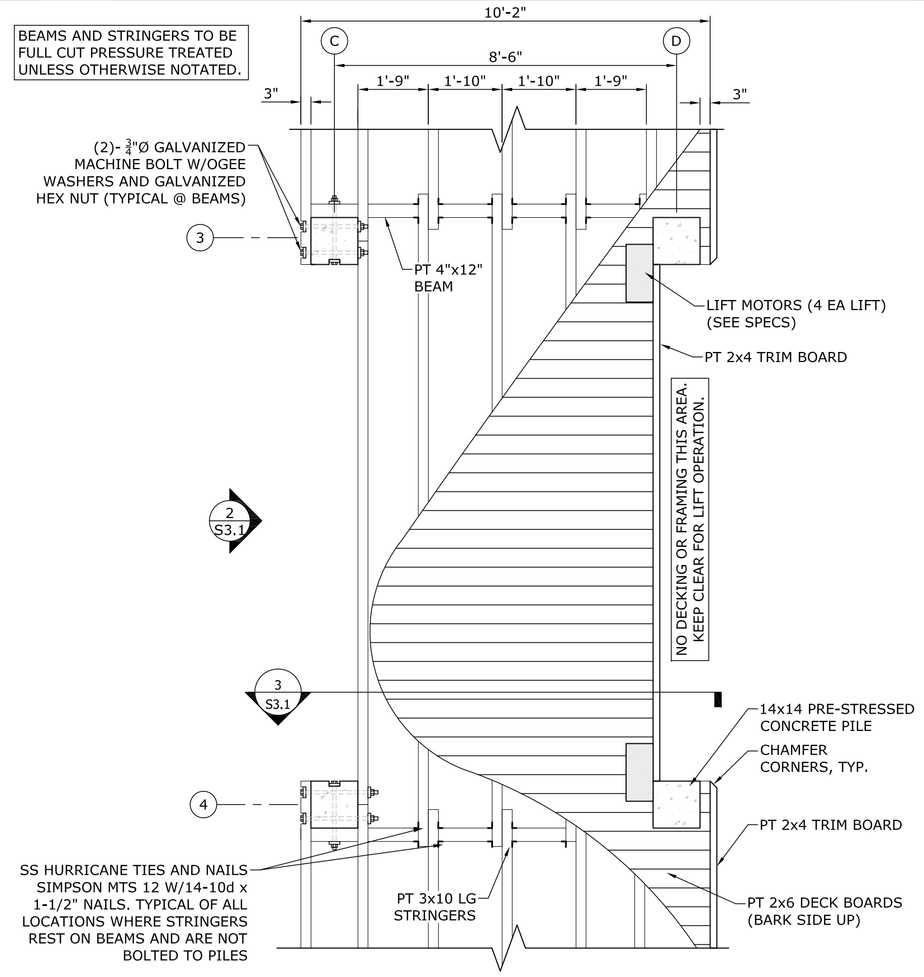

1 S3.1 PROPOSED 10' PIER PLAN
SCALE: 3/8" = 1'-0"

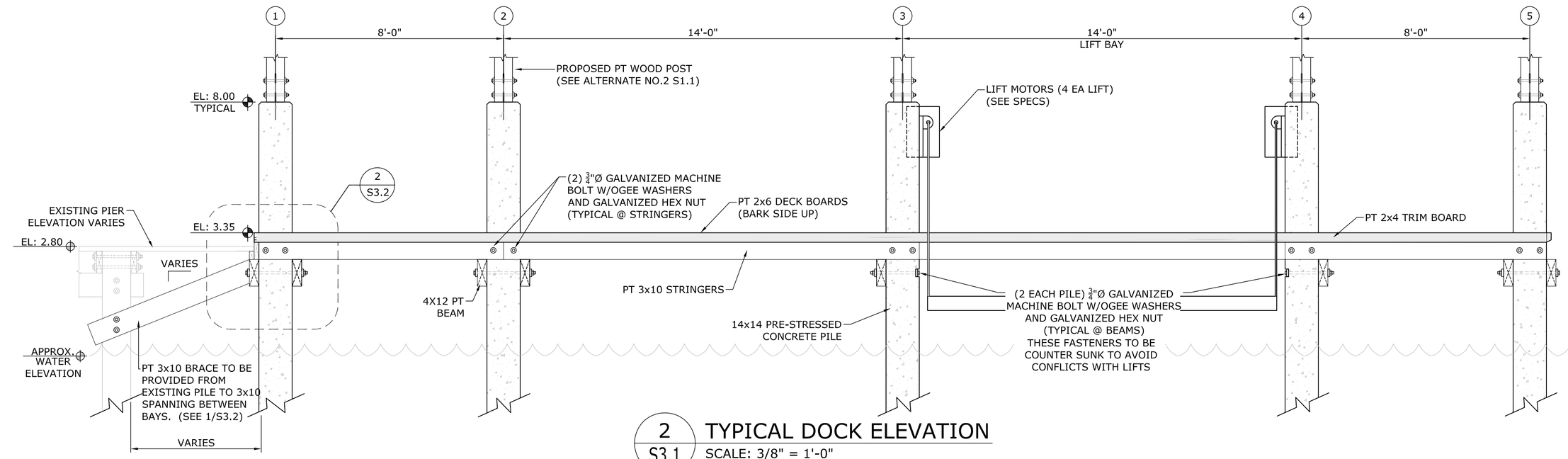

2 S3.1 TYPICAL DOCK ELEVATION
SCALE: 3/8" = 1'-0"

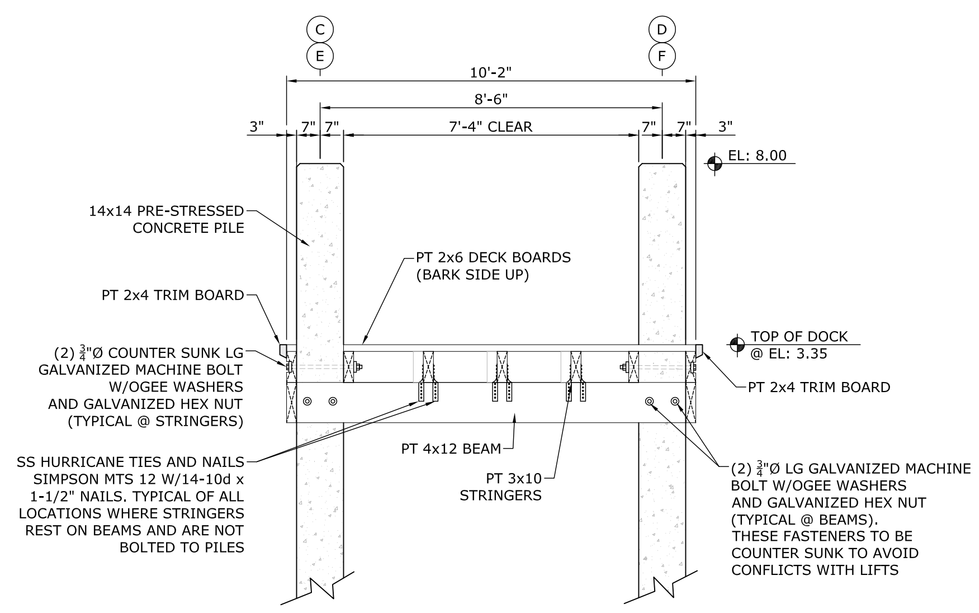

3 S3.1 PROPOSED 10' DOCK SECTION
SCALE: 3/8" = 1'-0"

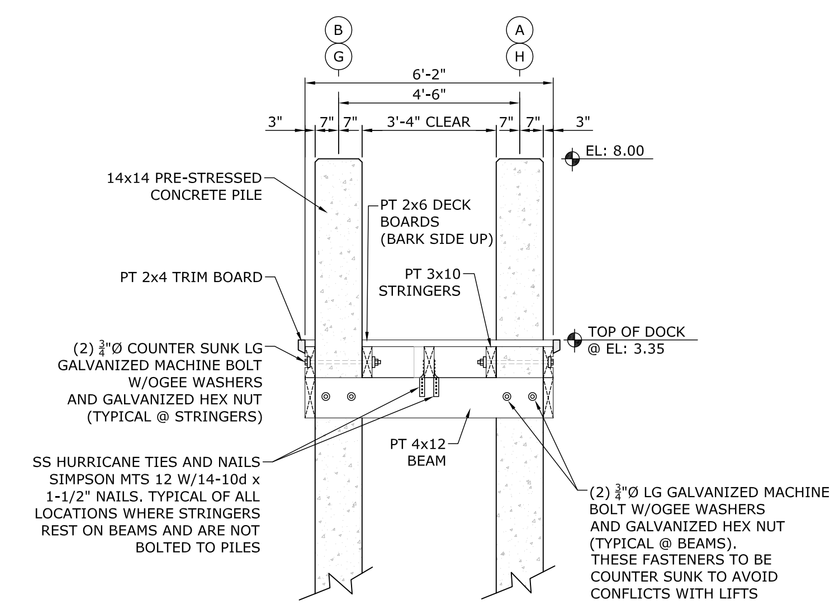

4 S3.1 PROPOSED 6' DOCK SECTION
SCALE: 3/8" = 1'-0"

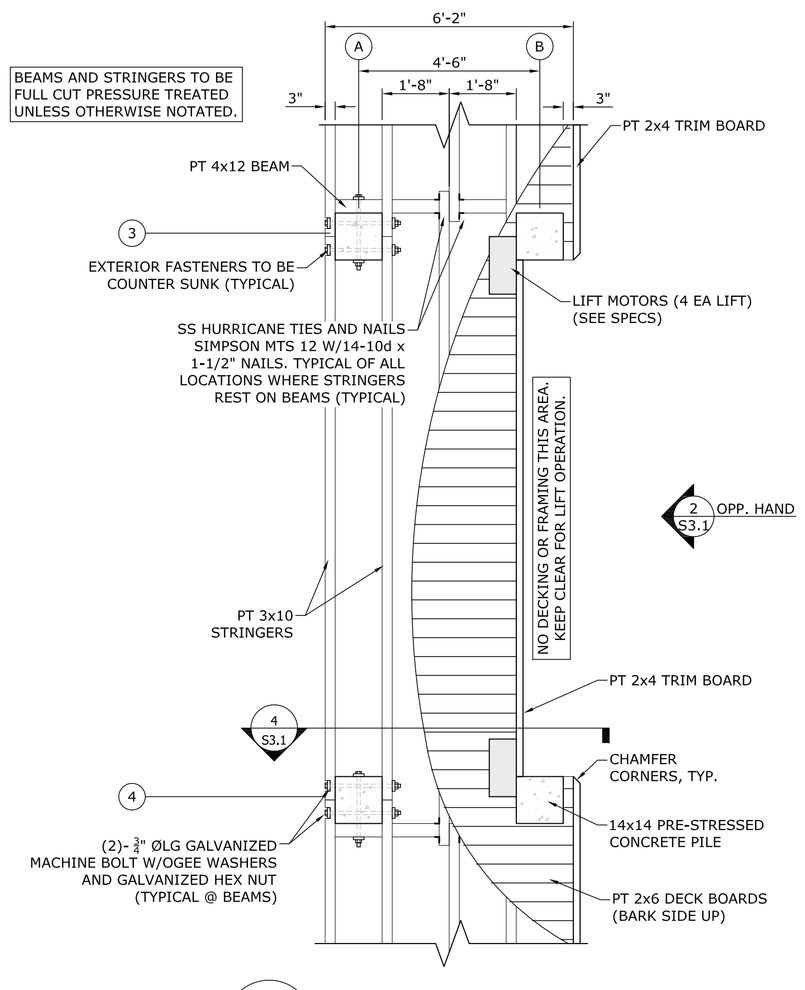

5 S3.1 PROPOSED 6' PIER PLAN
SCALE: 3/8" = 1'-0"

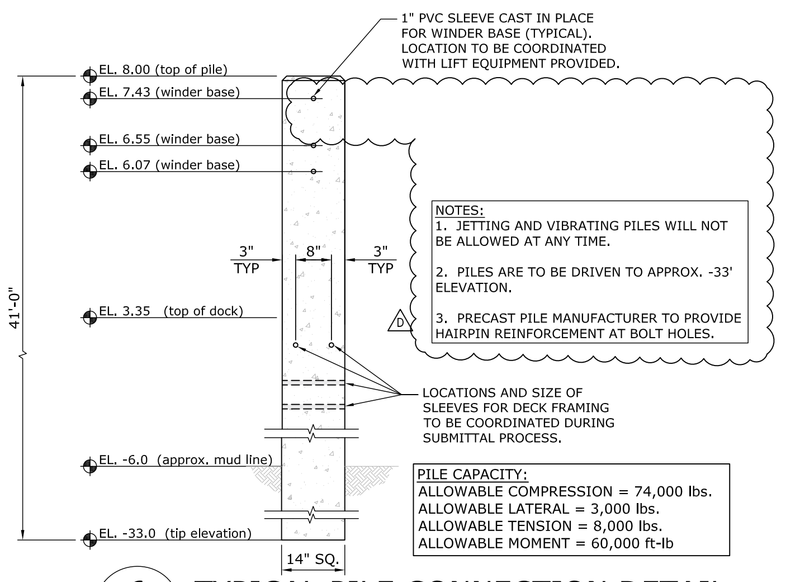

6 S3.1 TYPICAL PILE CONNECTION DETAIL
SCALE: 1/2" = 1'-0"

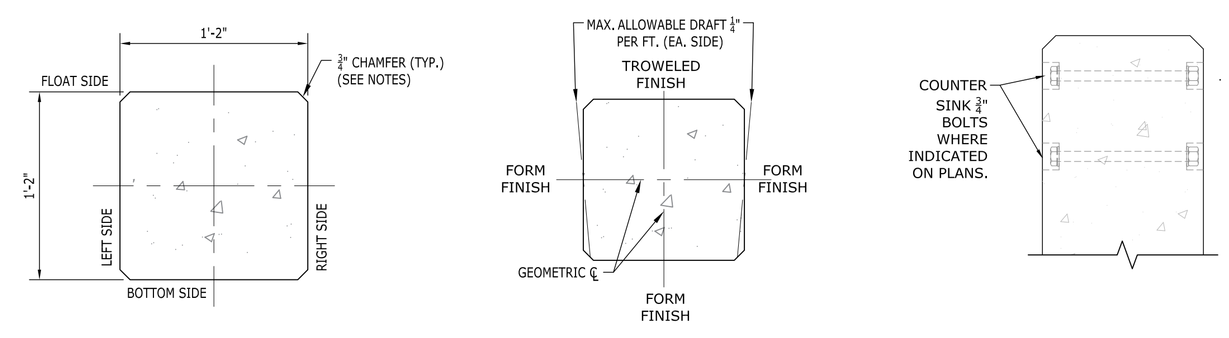

7 S3.1 ENLARGED CONCRETE PILE DETAILS
SCALE: NTS

ATTACHMENT #2 TO ADDENDUM #2

Rev. No. D

PROPRIETARY RIGHTS CLAUSE: INFORMATION AND DATA CONTAINED ON THIS DRAWING IS CONFIDENTIAL IF GIVEN TO AN ENTITY NOT HAVING A CONTRACTUAL RELATIONSHIP WITH THE ENGINEER, THE INFORMATION SHALL NOT BE USED WITHOUT PRIOR WRITTEN PERMISSION. THIS LEGEND SHALL BE MARKED ON ANY REPRODUCTIONS HEREOF IN WHOLE OR IN PART. COMPTON ENGINEERING, INC. © COPYRIGHT 2009.

COMPTON ENGINEERING, INC.
Engineering, Surveying, and Environmental Services
1706 Convent Avenue
Pascagoula, Mississippi 39567
Phone: (228) 762-3970 Fax: (228) 769-9790
E-mail: compton@comptonengineering.com

MISSISSIPPI DEPARTMENT OF MARINE RESOURCES
BOAT LIFTS AT OCEAN SPRINGS HARBOR

SECTIONS & DETAILS

SCALE: AS NOTED
JOB NO.: 216-015
DATE: JULY 2016
DSGN.: GJD
DWG. BY: TWP
CHK.: -
APVD.: JAB

VERIFY SCALES
BAR IS ONE INCH ON ORIGINAL DRAWING IF NOT ONE INCH ON THIS SHEET ADJUST SCALES ACCORDINGLY.
0 1"

S3.1
SHEET OF

DATE	DESCRIPTION	BY	APVD
A 10/6/16	ISSUED FOR REVIEW	TWP	GJD
B 10/17/16	ISSUED FOR BID	TWP	GJD
C 12/1/16	ISSUED FOR BID	TWP	GJD
D 12/30/16	ISSUED FOR ADDENDUM #2	TWP	JAB