GRAND BAY COASTAL RESOURCES CENTER DECKING

MISSISSIPPI DEPARTMENT OF MARINE RESOURCES
6005 BAYOU HERON ROAD, MOSS POINT MISSISSIPPI

DEMOLITION NOTES

CONTRACTOR TO FIELD VERIFY CONDITIONS PRIOR TO BIDDING. UPON DISCOVERY OF ANY DISCREPANCIES BETWEEN DRAWINGS DEPICTING EXISTING CONDITIONS OR UPON DISCOVERY OF UNKNOWN CONDITIONS DETRIMENTAL TO THE COMPLETION OF THE WORK AS INDICATED ON THE DRAWINGS CONTRACTOR SHALL IMMEDIATELY NOTIFY THE ARCHITECT IN WRITING.

1. CONTRACTOR SHALL MAINTAIN AND PROTECT ALL EXISTING TREES TO REMAIN PER REGULATIONS AND REQUIREMENTS OF THE LOCAL MUNICIPALITY.
2. CARE SHOULD BE TAKEN AT INTERFACE BETWEEN DEMOLITION AND EXISTING CONSTRUCTION TO REMAIN. AFTER REMOVAL OF MATERIALS TO BE DEMOLISHED, PATCH AND REPAIR DAMAGE TO ANY EXISTING ADJACENT WALLS, PORCHES, FRAMING, CABLE RAILING, ETC., TO A LIKE NEW CONDITION.
3. THE CONTRACTOR SHALL PROVIDE TEMPORARY PROTECTION AS NECESSARY AND AS REQUIRED TO PROTECT ADJACENT MATERIALS.
4. ALL DEMOLITION WORK SHALL BE EXECUTED IN CONFORMANCE WITH ALL CODES AND ORDINANCES AS SET FORTH BY ALL GOVERNING AUTHORITIES.
5. IF SUBSURFACE DIGGING IS REQUIRED, THE CONTRACTOR SHALL CALL THE MISSISSIPPI DAMAGE PREVENTION NUMBER (1-800-227-6477) AS REQUIRED BY LAW TO LOCATE ALL EXISTING SITE UTILITIES PRIOR TO COMMENCING WORK.
6. ALL WORK SHALL BE COORDINATED WITH THE OWNER TO MAINTAIN ACCESS TO THE BUILDING FOR SCHEDULED EVENTS AND DAILY OPERATIONS.
7. LAYDOWN AREA SHALL BE COORDINATED WITH THE OWNER TO MAINTAIN ACCESS TO THE BUILDING FOR SCHEDULED EVENTS AND DAILY OPERATIONS.

SYMBOLS

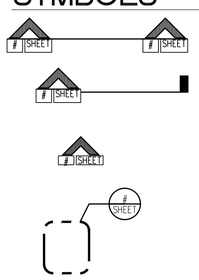

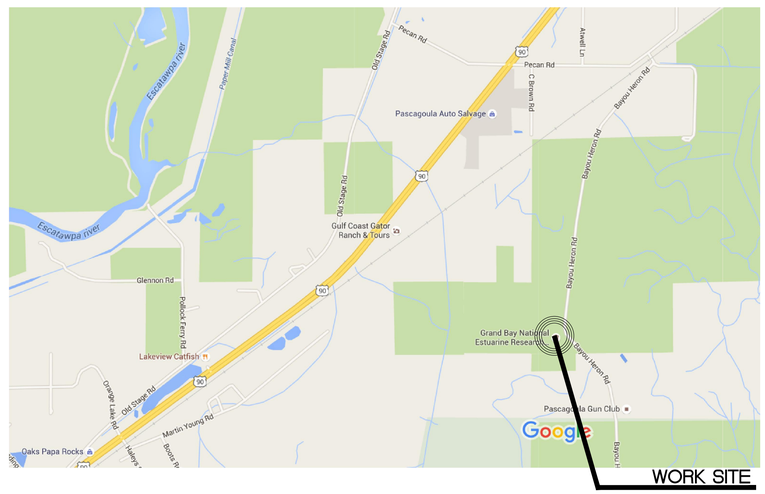

LOCATION MAP
NOT TO SCALE

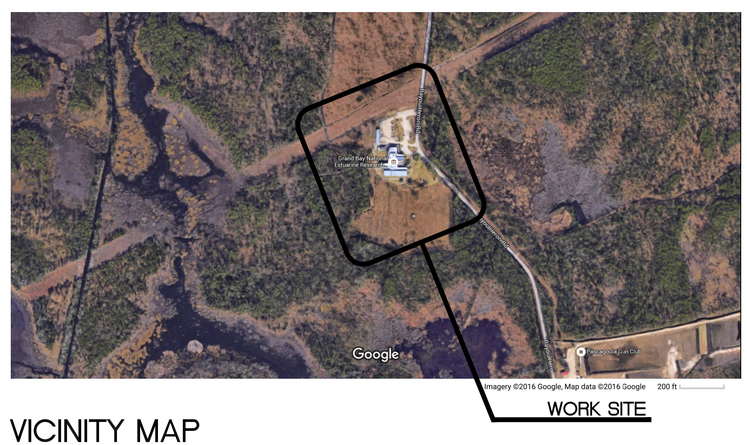

VICINITY MAP
NOT TO SCALE

GENERAL NOTES

1. PRIOR TO BIDDING, CONTRACTOR SHALL VISIT SITE AND THOROUGHLY FAMILIARIZE HIMSELF WITH ALL EXISTING CONDITIONS AND WITH THE CONTRACT DOCUMENTS. ANY QUESTIONS OR DISCREPANCIES REGARDING THE NATURE OR INTENT OR THE WORK SHALL BE DIRECTED TO THE ARCHITECT PRIOR TO BIDDING.
2. CONTRACTOR SHALL BE RESPONSIBLE FOR SECURITY OF THE WORK SITE, ETC. DURING THE PROJECT. THE CONTRACTOR SHALL CORRECT ALL DAMAGE CAUSED BY HIS WORKMEN, AT NO COST TO THE OWNER.
3. THE CONTRACTOR SHALL EXERCISE CARE AND TAKE APPROPRIATE PRECAUTIONARY MEASURES TO PREVENT ANY DAMAGE TO THE EXISTING SITE, INCLUDING BUT NOT LIMITED TO LANDSCAPING, SIDEWALKS, UTILITIES, COMMUNICATIONS, ETC. THROUGHOUT THE CONTRACT PERIOD. CONTRACTOR SHALL PROVIDE APPROPRIATE BARRICADES, DUST SCREENS, ETC.
4. NOT EVERY CONDITION HAS BEEN DETAILED. WHERE SPECIFIC DETAILING IS NOT SHOWN, EXECUTE THE CONSTRUCTION IN A SOUND, WORKMANLIKE MANNER CONSISTENT WITH ACCEPTED BUILDING PRACTICES AND WITH OTHER DETAILING SHOWN.
5. THE CONTRACTOR SHALL FIELD VERIFY ALL DIMENSIONS AND EXISTING CONDITIONS PRIOR TO ORDER OF MATERIALS OR LAYOUT OF NEW WORK.
6. CONTRACTOR SHALL OBTAIN AND PAY FOR ALL CONSTRUCTION PERMITS THAT ARE REQUIRED TO ACCOMPLISH THE WORK SPECIFIED HEREIN.

SHEET INDEX

T-1	TITLE SHEET
A1.0	EXISTING SITE PLAN
A2.0	ENLARGED PLANS
A3.0	ENLARGED PLAN AND DETAILS
A4.0	DOCK PLANS AND DETAILS

SET NO. _____

allred ARCHITECTURAL GROUP
628 WASHINGTON AVENUE, SUITE C
OCEAN SPRINGS, MS 39564
PHONE: (228) 742-1975 FAX: (228) 749-9545
EMAIL: CONTACT@ALLREDARCHITECTURALGROUP.COM

TITLE SHEET

GRAND BAY COASTAL RESOURCES CENTER DECKING
MISSISSIPPI DEPARTMENT OF MARINE RESOURCES
6005 BAYOU HERON ROAD, MOSS POINT, MISSISSIPPI 39562

APPROVED BY
APPROVED BY
APPROVED BY

JOB NUMBER 2016-17
DATE 12-13-2016
REVISED -
DRAWN BY SCN
CHECKED BY MA

REGISTERED ARCHITECT
Dexter Hopper Allred III
791
Magnolia, MS
STATE OF MISSISSIPPI
12-13-2016

SHEET
T1.0
OF SHEETS

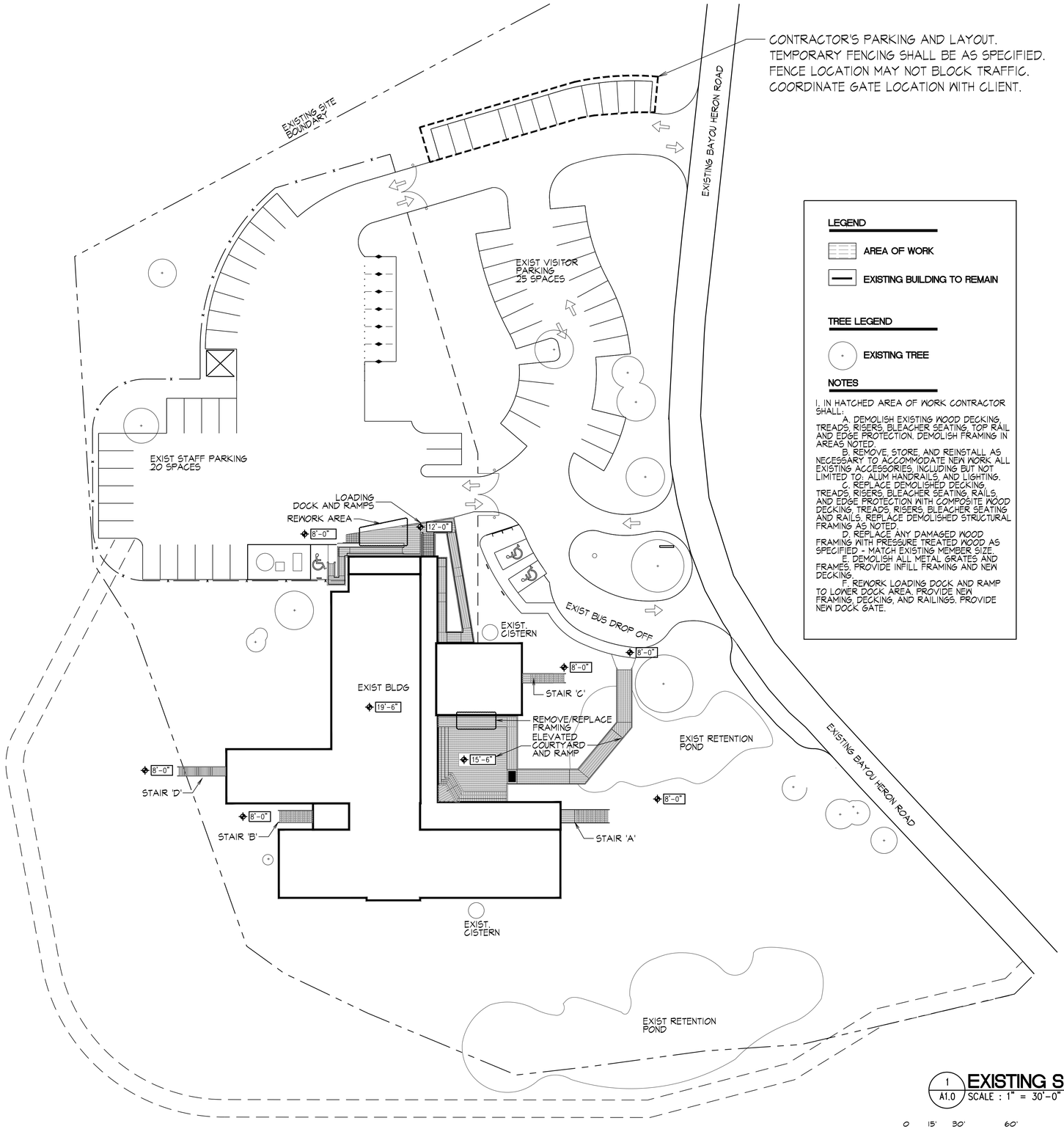

LEGEND

AREA OF WORK

EXISTING BUILDING TO REMAIN

TREE LEGEND

EXISTING TREE

NOTES

1. IN HATCHED AREA OF WORK CONTRACTOR SHALL:

A. DEMOLISH EXISTING WOOD DECKING TREADS, RISERS, BLEACHER SEATING, TOP RAIL AND EDGE PROTECTION. DEMOLISH FRAMING IN AREAS NOTED.

B. REMOVE, STORE, AND REINSTALL AS NECESSARY TO ACCOMMODATE NEW WORK ALL EXISTING ACCESSORIES, INCLUDING BUT NOT LIMITED TO: ALUM HANDRAILS, AND LIGHTING.

C. REPLACE DEMOLISHED DECKING, TREADS, RISERS, BLEACHER SEATING, RAILS, AND EDGE PROTECTION WITH COMPOSITE WOOD DECKING, TREADS, RISERS, BLEACHER SEATING AND RAILS. REPLACE DEMOLISHED STRUCTURAL FRAMING AS NOTED.

D. REPLACE ANY DAMAGED WOOD FRAMING WITH PRESSURE TREATED WOOD AS SPECIFIED - MATCH EXISTING MEMBER SIZE.

E. DEMOLISH ALL METAL GRATES AND FRAMES. PROVIDE INFILL FRAMING AND NEW DECKING.

F. REWORK LOADING DOCK AND RAMP TO LOWER DOCK AREA. PROVIDE NEW FRAMING, DECKING, AND RAILINGS. PROVIDE NEW DOCK GATE.

1 / A1.0 **EXISTING SITE PLAN**
SCALE : 1" = 30'-0"

0 15' 30' 60'
SCALE: 1" = 30'-0"

allred ARCHITECTURAL GROUP
628 WASHINGTON AVENUE, SUITE C
OCEAN SPRINGS, MS 39564
PHONE: (228) 742-1975 FAX: (228) 749-9545
EMAIL: CONTACT@ALLREDARCHITECTURALGROUP.COM

EXISTING SITE PLAN

GRAND BAY COASTAL RESOURCES CENTER DECKING
MISSISSIPPI DEPARTMENT OF MARINE RESOURCES
6005 BAYOU HERON ROAD, MOSS POINT, MISSISSIPPI 39562

APPROVED BY
APPROVED BY
APPROVED BY

JOB NUMBER 2016-17
DATE 12-13-2016
REVISED -
DRAWN BY SGN
CHECKED BY HA

REGISTERED ARCHITECT Hector Hoppe Allred III 7791 Magnolia, MS STATE OF MISSISSIPPI
12-13-2016

SHEET
A1.0
OF SHEETS

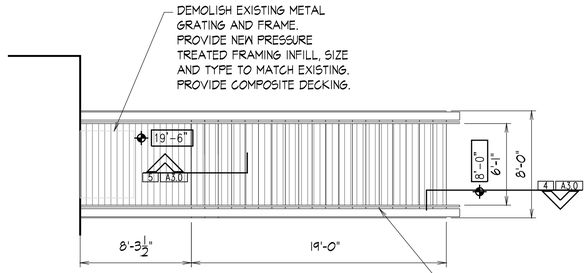

1 A2.0 **STAIR PLAN 'A'**
SCALE : 3/16" = 1'-0"

@ EXISTING STAIRS TO REMAIN: PROVIDE NEW COMPOSITE TREADS, RISERS, LANDING, TOP RAIL AND EDGE PROTECTION. GUARDRAIL UPRIGHTS AND STEEL CABLE SHALL REMAIN. CONTRACTOR TO REMOVE, STORE AND REPLACE HANDRAIL AND ALL OTHER ACCESSORIES AS NECESSARY.

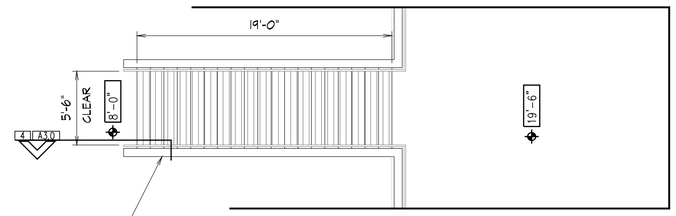

2 A2.0 **STAIR PLAN 'B'**
SCALE : 3/16" = 1'-0"

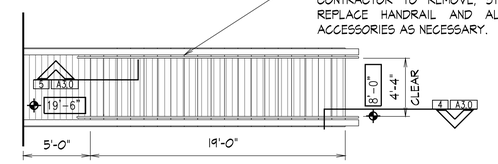

3 A2.0 **STAIR PLAN 'C'**
SCALE : 3/16" = 1'-0"

STAIR 'D' IS MIRRORED

NOTES:
1. CONTRACTOR SHALL FIELD VERIFY ALL DIMENSIONS PRIOR TO ORDERING MATERIAL OR LAYING OUT WORK.
2. ALL CONSTRUCTION SHALL BE MAINTAINED AS ADA ACCESSIBLE.
3. CONTRACTOR SHALL INSPECT ALL EXISTING STRUCTURE TO REMAIN FOR ROT, DECAY, AND INFESTATION AND REPORT ALL SUCH CONDITIONS TO THE ARCHITECT PRIOR TO CONTINUING WORK.
4. WHERE EXISTING STRUCTURE IS TO BE REPLACED, OR NEW FRAMING TO BE PROVIDED, NEW FRAMING SHALL BE OF SPECIES SPECIFIED, SHALL BE PRESSURE TREATED AS SPECIFIED AND SHALL MATCH EXISTING FRAMING IN SIZE. ALL HARDWARE TO BE REPLACED SHALL BE OF MATERIAL SPECIFIED AND OF SIZE AND TYPE TO MATCH EXISTING.

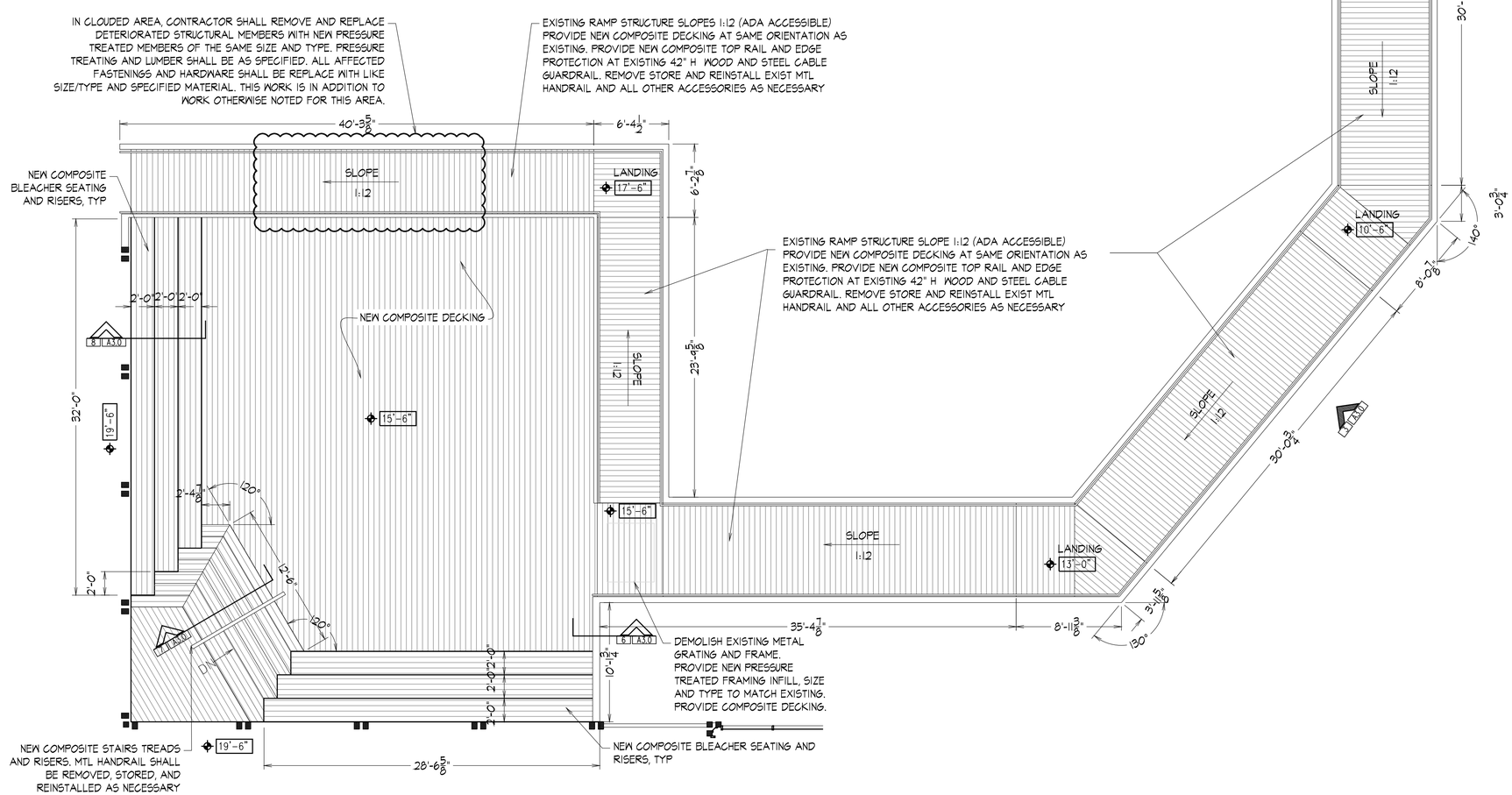

4 A2.0 **ELEVATED COURTYARD AND RAMP PLAN**
SCALE : 3/16" = 1'-0"

0 2'-8" 5'-4" 10'-8"
SCALE: 3/16" = 1'-0"

allred ARCHITECTURAL GROUP
628 WASHINGTON AVENUE, SUITE C
OCEAN SPRINGS, MS 39564
PHONE: (228) 742-1975 FAX: (228) 749-9545
EMAIL: CONTACT@ALLREDARCHITECTURALGROUP.COM

ENLARGED PLANS

GRAND BAY COASTAL RESOURCES CENTER DECKING
MISSISSIPPI DEPARTMENT OF MARINE RESOURCES
6005 BAYOU HERON ROAD, MOSS POINT, MISSISSIPPI 39562

APPROVED BY
APPROVED BY
APPROVED BY

JOB NUMBER 2016-17
DATE 12-13-2016
REVISED -
DRAWN BY SCN
CHECKED BY HA

REGISTERED ARCHITECT Chester Hoppel Allred, Jr. 7791 Pascagoula, MS STATE OF MISSISSIPPI
12-13-2016

SHEET **A2.0**
OF SHEETS

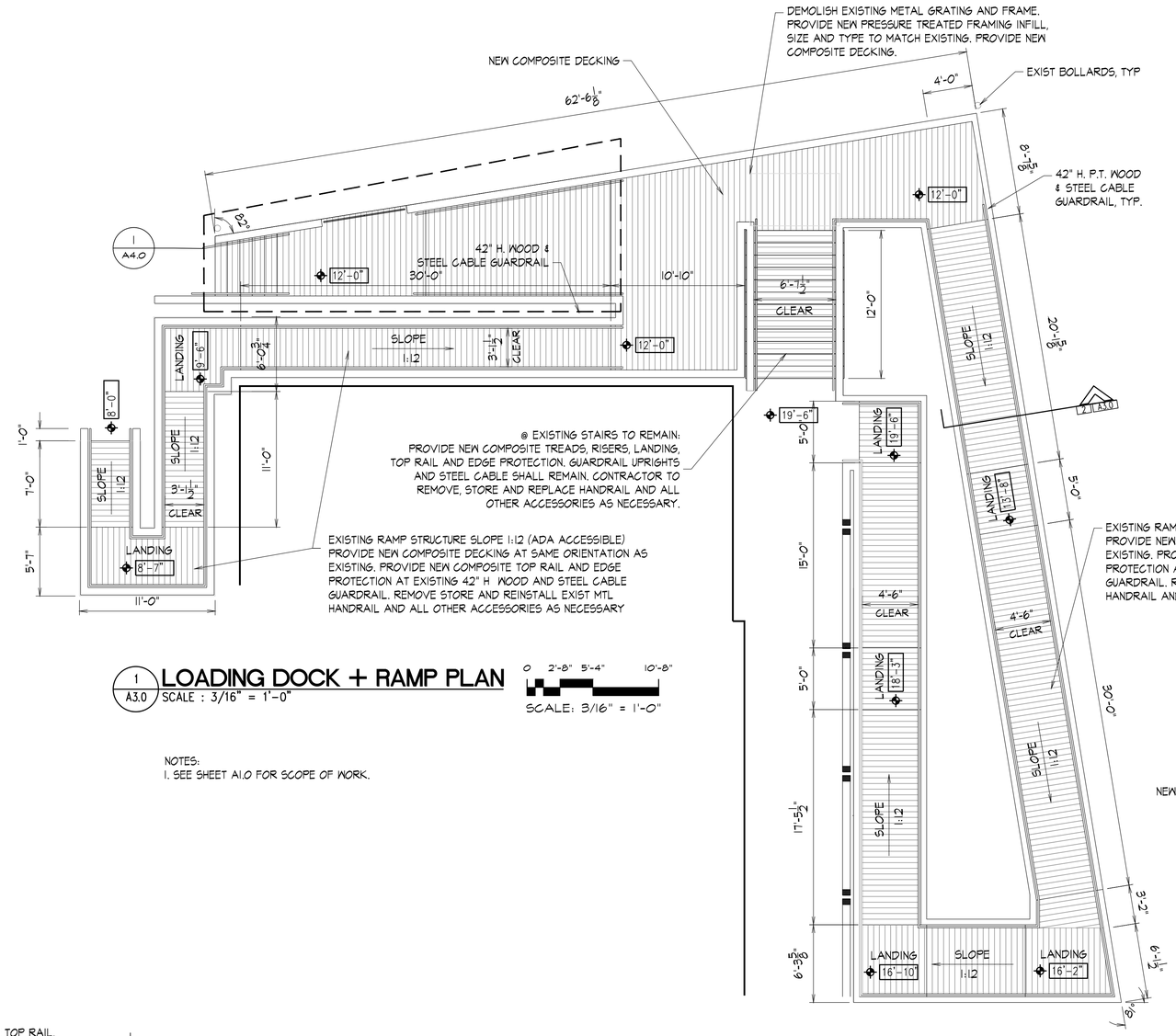

1 A4.0

1 A3.0 LOADING DOCK + RAMP PLAN

SCALE : 3/16" = 1'-0"

0 2'-8" 5'-4" 10'-8"
SCALE: 3/16" = 1'-0"

NOTES:
1. SEE SHEET A1.0 FOR SCOPE OF WORK.

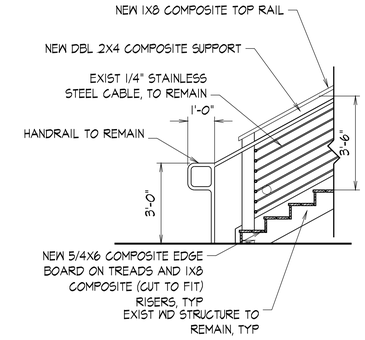

4 A3.0 STAIR DETAIL

SCALE : 3/8" = 1'-0"

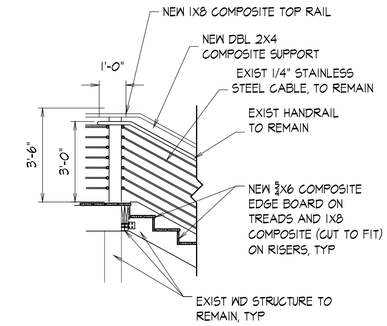

5 A3.0 STAIR DETAIL

SCALE : 3/8" = 1'-0"

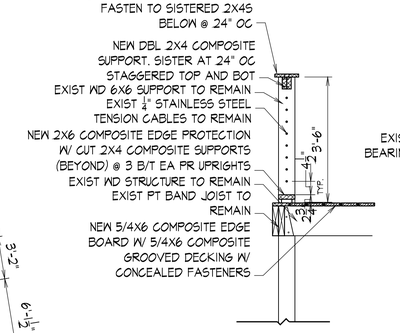

6 A3.0 GUARDRAIL DETAIL

SCALE : 1/2" = 1'-0"

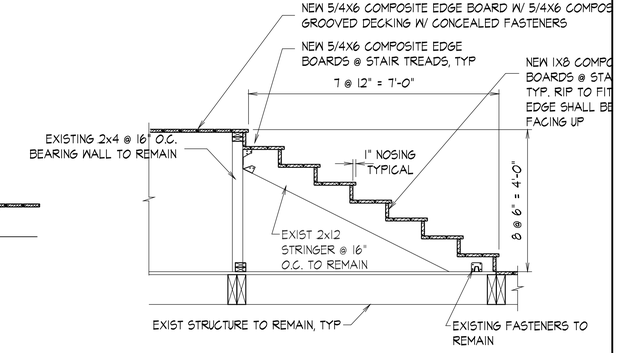

7 A3.0 STAIR DETAIL

SCALE : 1/2" = 1'-0"

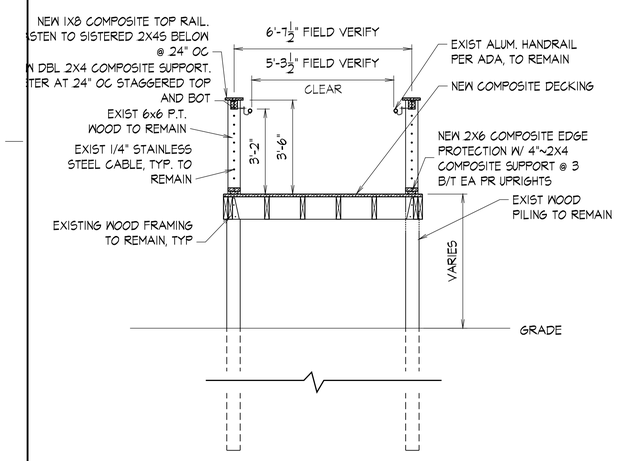

2 A3.0 RAMP DETAIL

SCALE : 3/8" = 1'-0"

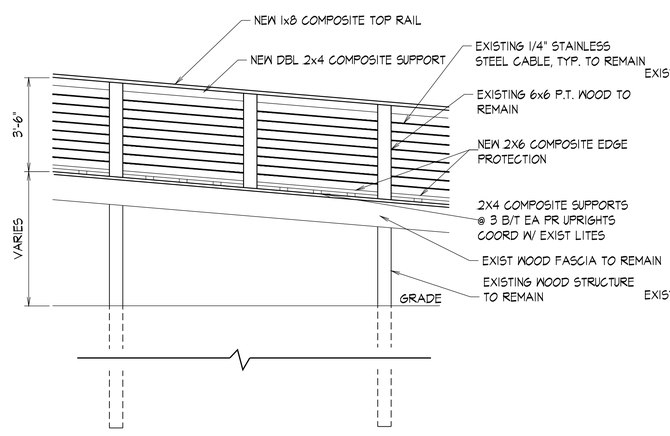

3 A3.0 RAMP ELEVATION

SCALE : 3/8" = 1'-0"

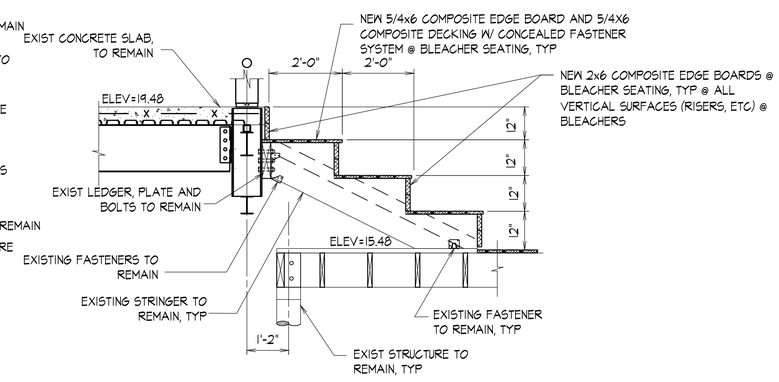

8 A3.0 BLEACHER DETAIL

SCALE : 1/2" = 1'-0"

0 1'-4" 2'-8" 5'-4"
SCALE: 3/8" = 1'-0"

0 1' 2' 4'
SCALE: 1/2" = 1'-0"

allred ARCHITECTURAL GROUP
628 WASHINGTON AVENUE, SUITE C
OCEAN SPRINGS, MS 39564
PHONE: (228) 742-1975 FAX: (228) 749-9545
EMAIL: CONTACT@ALLREDARCHITECTURALGROUP.COM

ENLARGED PLAN AND DETAILS

GRAND BAY COASTAL RESOURCES CENTER DECKING
MISSISSIPPI DEPARTMENT OF MARINE RESOURCES
6005 BAYOU HERON ROAD, MOSS POINT, MISSISSIPPI 39562

APPROVED BY
APPROVED BY
APPROVED BY

JOB NUMBER 2016-17
DATE 12-13-2016
REVISED -
DRAWN BY SCN
CHECKED BY HA

REGISTERED ARCHITECT Chester Hopper Allred, Jr. #7791 Pascagoula, MS STATE OF MISSISSIPPI
12-13-2016

SHEET
A3.0
OF SHEETS

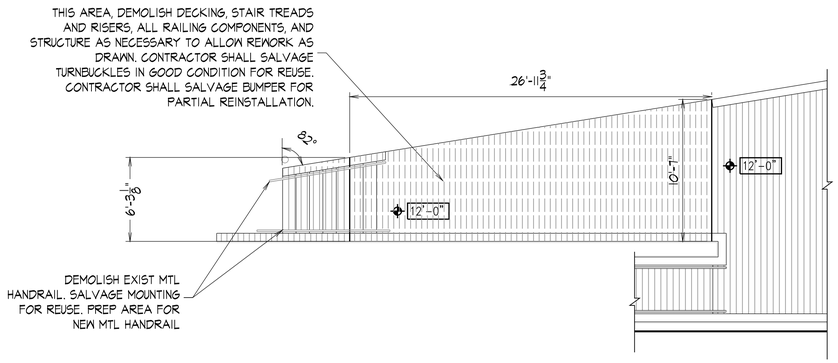

1 / A4.0 LOADING DOCK + RAMP DEMOLITION PLAN

SCALE : 3/16" = 1'-0"

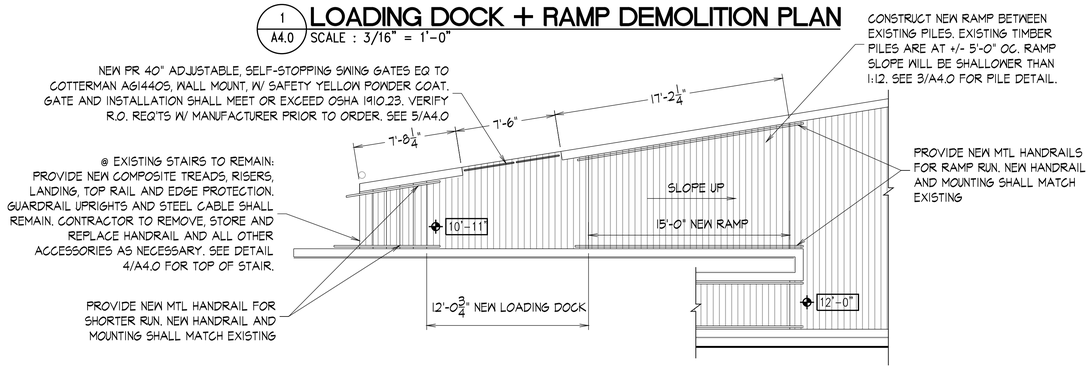

2 / A4.0 LOADING DOCK + RAMP PLAN

SCALE : 3/16" = 1'-0"

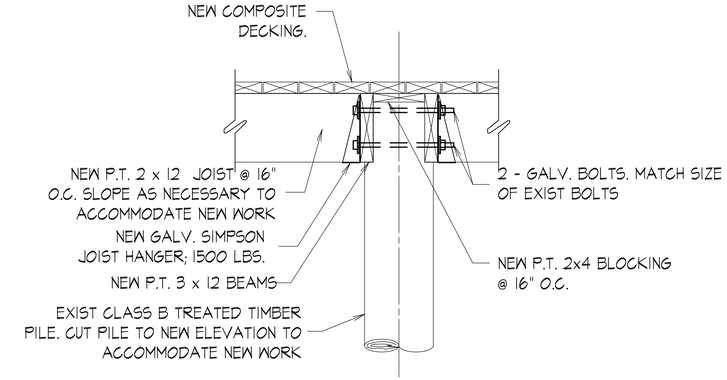

3 / A4.0 TYP REWORK DETAIL @ TIMBER PILE

SCALE : 1/2" = 1'-0"

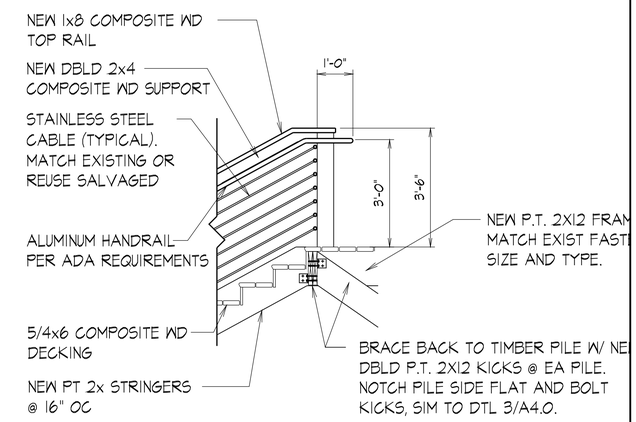

4 / A4.0 REWORK DETAIL @ STAIR

SCALE : 1/2" = 1'-0"

5 / A4.0 GATE ELEVATION

SCALE : 1/2" = 1'-0"

NEW PR 40" ADJUSTABLE, SELF-STOPPING SWING GATES EQ TO COTTERMAN AG1440S, WALL MOUNT, W SAFETY YELLOW POWDER COAT. GA AND INSTALLATION SHALL MEET OR EXCEED OSHA 1910.23. VERIFY R.O. REQ'TS W/ MANUFACTURER PRIOR TO ORDER

0 2'-8" 5'-4" 10'-8"
SCALE: 3/16" = 1'-0"

0 1' 2' 4'
SCALE: 1/2" = 1'-0"

allred ARCHITECTURAL GROUP
628 WASHINGTON AVENUE, SUITE C
OCEAN SPRINGS, MS 39564
PHONE: (228) 740-1975 FAX: (228) 769-9545
EMAIL: CONTACT@ALLREDARCHITECTURALGROUP.COM

DOCK PLANS AND DETAILS

GRAND BAY COASTAL RESOURCES CENTER DECKING
MISSISSIPPI DEPARTMENT OF MARINE RESOURCES
6005 BAYOU HERON ROAD, MOSS POINT, MISSISSIPPI 39562

APPROVED BY
APPROVED BY
APPROVED BY

JOB NUMBER 2016-17
DATE 12-13-2016
REVISED -
DRAWN BY SCN
CHECKED BY HA

REGISTERED ARCHITECT Chester Hoppe Allred, Jr. 7791 Pascagoula, MS STATE OF MISSISSIPPI
12-13-2016

SHEET
A4.0
OF SHEETS