allred
ARCHITECTURAL
GROUP

628 Washington Avenue, Suite C
Ocean Springs, MS 39564

February 1, 2017

2016-17
Grand Bay Coastal Resources Center Decking
Biloxi, MS

00.910 ADDENDUM NO 1.
(This Addendum contains 1 pages, 2 attachments (24x36), for a total of 3 pages.

CLARIFICATIONS

1. Contract time shall be provided by the contractor on the bid form and shall include all construction phases.
2. Construction shall be phased. See CHANGES TO THE DRAWINGS, below.

CHANGES TO THE DRAWINGS

1. Delete sheet A1.0 in its entirety and replace with sheet A1.0R. Update the sheet index to match.
2. Delete sheet A3.0 in its entirety and replace with sheet A3.0R. Update the sheet index to match.

END OF ADDENDUM #1

Phone: (228) 762-1975 Fax: (228) 769-9545

CHET ALLRED, AIA
HOPPY ALLRED, AIA, LEED AP
JOHN STOLARSKI, AIA

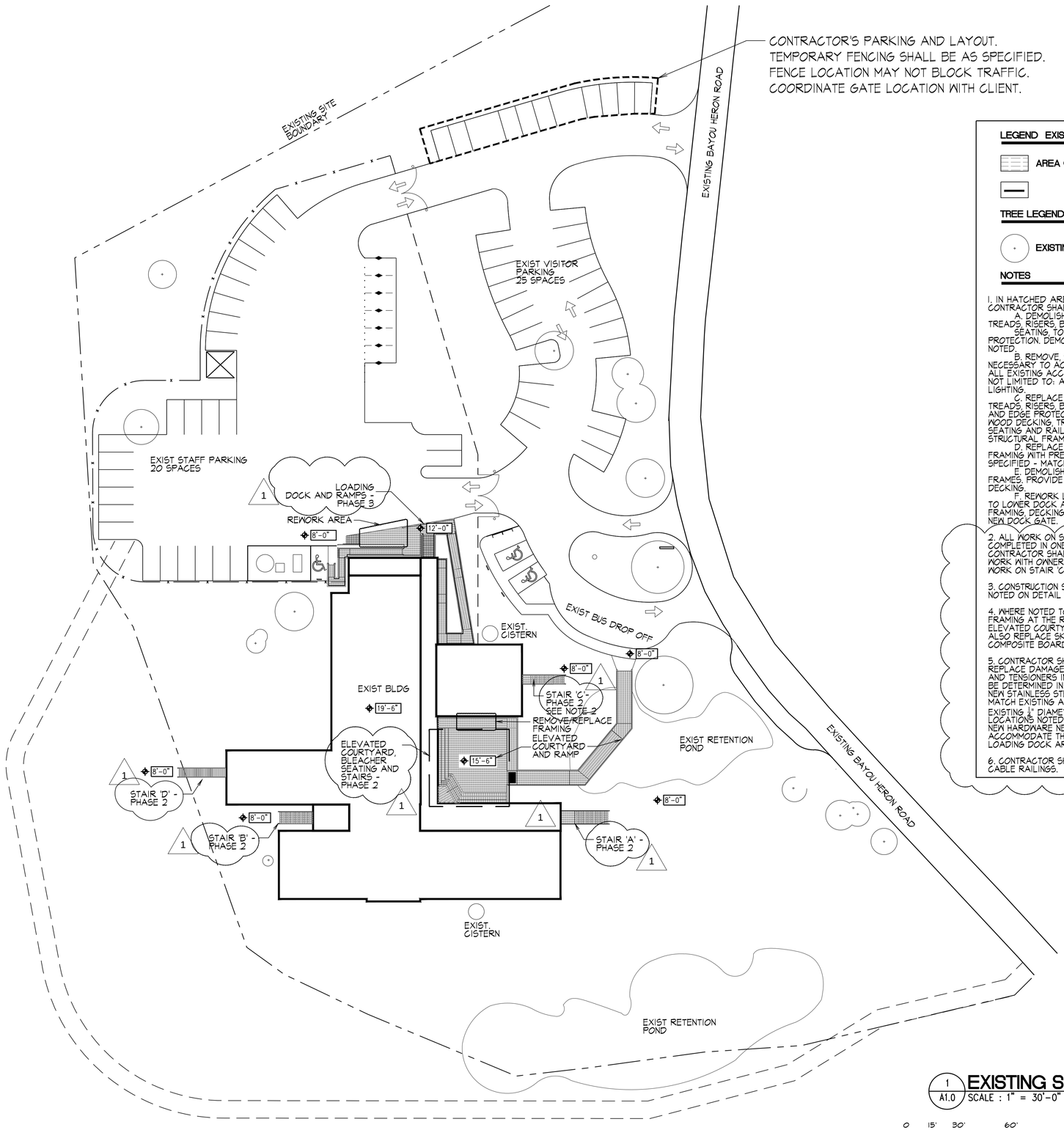

LEGEND EXISTING BUILDING TO REMAIN

AREA OF WORK

TREE LEGEND

EXISTING TREE

NOTES

1. IN HATCHED AREA OF WORK CONTRACTOR SHALL:
   A. DEMOLISH EXISTING WOOD DECKING, TREADS, RISERS, BLEACHER SEATING, TOP RAIL AND EDGE PROTECTION. DEMOLISH FRAMING IN AREAS NOTED.
   B. REMOVE, STORE, AND REINSTALL AS NECESSARY TO ACCOMMODATE NEW WORK ALL EXISTING ACCESSORIES, INCLUDING BUT NOT LIMITED TO: ALUM HANDRAILS, AND LIGHTING.
   C. REPLACE DEMOLISHED DECKING, TREADS, RISERS, BLEACHER SEATING, RAILS, AND EDGE PROTECTION WITH COMPOSITE WOOD DECKING, TREADS, RISERS, BLEACHER SEATING AND RAILS. REPLACE DEMOLISHED STRUCTURAL FRAMING AS NOTED.
   D. REPLACE ANY DAMAGED WOOD FRAMING WITH PRESSURE TREATED WOOD AS SPECIFIED - MATCH EXISTING MEMBER SIZE.
   E. DEMOLISH ALL METAL GRATES AND FRAMES. PROVIDE INFILL FRAMING AND NEW DECKING.
   F. REWORK LOADING DOCK AND RAMP TO LOWER DOCK AREA. PROVIDE NEW FRAMING, DECKING, AND RAILINGS. PROVIDE NEW DOCK GATE.
2. ALL WORK ON STAIR 'C' MUST BE COMPLETED IN ONE CALENDAR DAY. CONTRACTOR SHALL COORDINATE TIME OF WORK WITH OWNER PRIOR TO COMMENCING WORK ON STAIR 'C'.
3. CONSTRUCTION SHALL BE PHASED AS NOTED ON DETAIL 1/A1.0.
4. WHERE NOTED TO REMOVE/REPLACE FRAMING AT THE RAMP SERVING THE ELEVATED COURTYARD, CONTRACTOR SHALL ALSO REPLACE SKIRTING W/ SQ EDGED COMPOSITE BOARDS.
5. CONTRACTOR SHALL REMOVE AND REPLACE DAMAGED CABLE RAIL HARDWARE AND TENSIONERS IN MAX 10 LOCATIONS TO BE DETERMINED IN FIELD BY THE ARCHITECT. NEW STAINLESS STEEL HARDWARE SHALL MATCH EXISTING AND SHALL ACCOMMODATE EXISTING ¼" DIAMETER CABLE RAIL. THE 10 LOCATIONS NOTED HERE DO NOT INCLUDE NEW HARDWARE NECESSARY TO ACCOMMODATE THE REWORK OF THE LOADING DOCK AREA.
6. CONTRACTOR SHALL TIGHTEN ALL EXISTING CABLE RAILINGS.

1 / A1.0 **EXISTING SITE PLAN**
SCALE : 1" = 30'-0"

0 15' 30' 60'
SCALE: 1" = 30'-0"

allred ARCHITECTURAL GROUP
628 WASHINGTON AVENUE, SUITE C
OCEAN SPRINGS, MS 39564
PHONE: (228) 762-1975 FAX: (228) 769-9545
EMAIL:CONTACT@ALLREDARCHITECTURALGROUP.COM

EXISTING SITE PLAN

GRAND BAY COASTAL RESOURCES CENTER DECKING
MISSISSIPPI DEPARTMENT OF MARINE RESOURCES
6005 BAYOU HERON ROAD, MOSS POINT, MISSISSIPPI 39562

APPROVED BY
APPROVED BY
APPROVED BY

JOB NUMBER 2016-17
DATE 12-13-2016
REVISED -
DRAWN BY SCN
CHECKED BY HA

REGISTERED ARCHITECT
Dexter Hopper Allred
Jr. 7791
Pascagoula, MS
STATE OF MISSISSIPPI
12-13-2016

SHEET
A1.0R
OF SHEETS

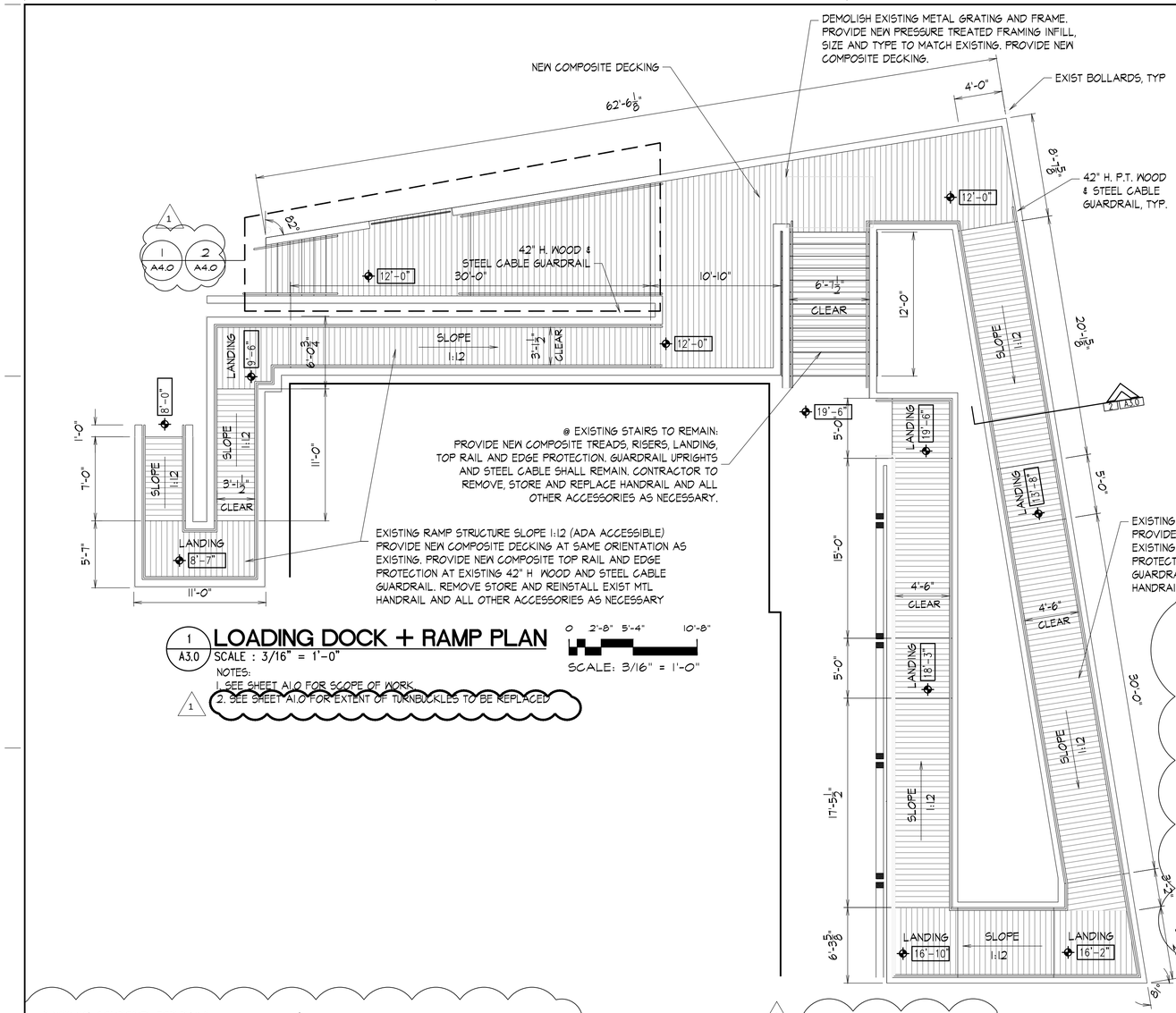

1 A3.0 **LOADING DOCK + RAMP PLAN**
SCALE : 3/16" = 1'-0"

NOTES:
1. SEE SHEET A1.0 FOR SCOPE OF WORK.
2. SEE SHEET A1.0 FOR EXTENT OF TURNBUCKLES TO BE REPLACED

SCALE: 3/16" = 1'-0"

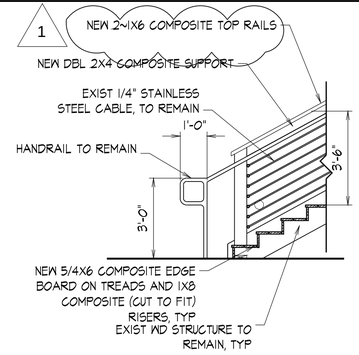

4 A3.0 **STAIR DETAIL**
SCALE : 3/8" = 1'-0"

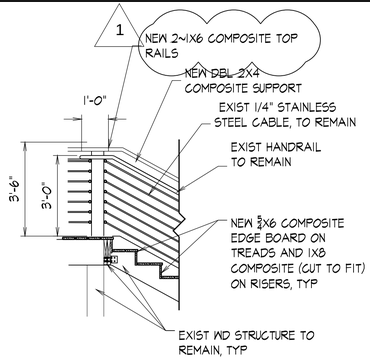

5 A3.0 **STAIR DETAIL**
SCALE : 3/8" = 1'-0"

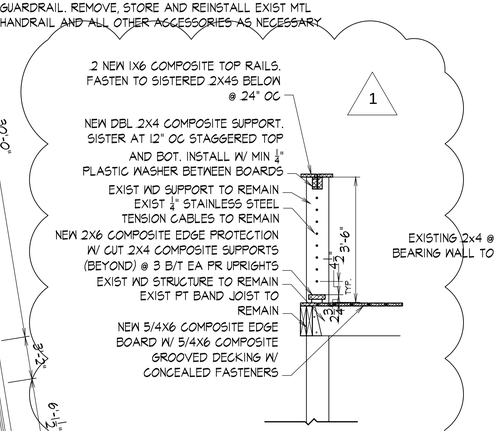

6 A3.0 **GUARDRAIL DETAIL**
SCALE : 1/2" = 1'-0"

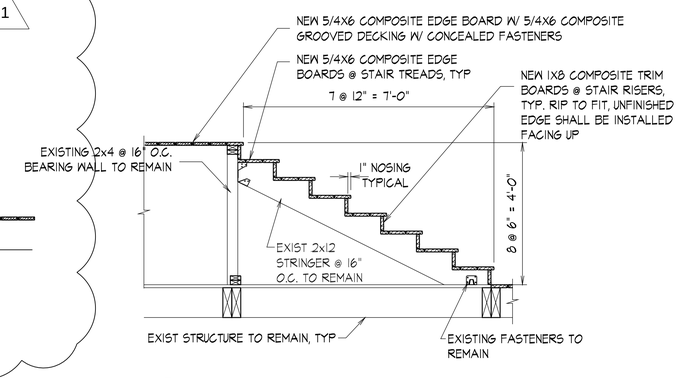

7 A3.0 **STAIR DETAIL**
SCALE : 1/2" = 1'-0"

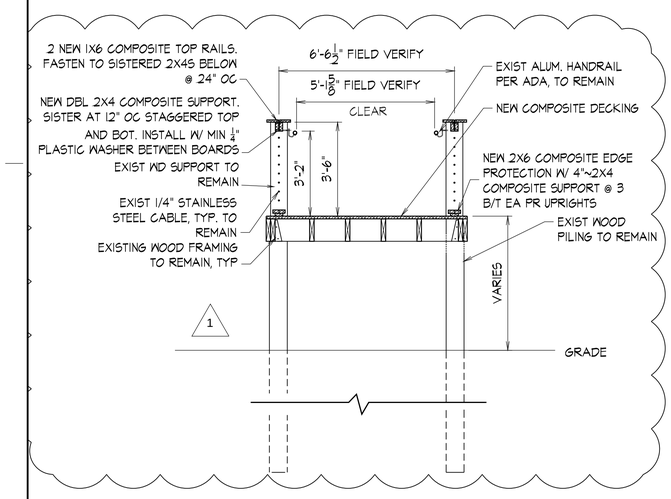

2 A3.0 **RAMP DETAIL**
SCALE : 3/8" = 1'-0"

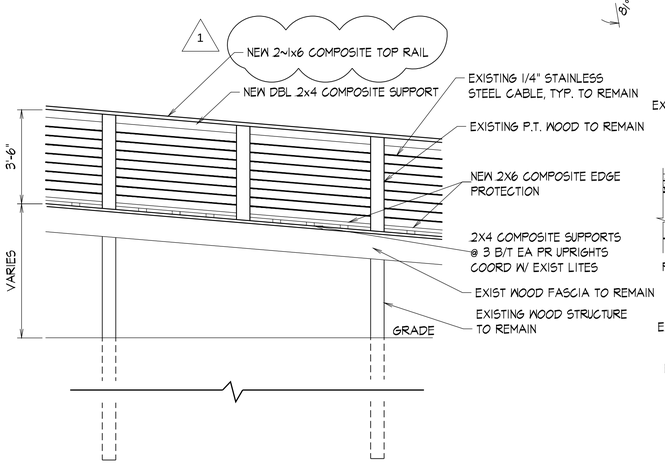

3 A3.0 **RAMP ELEVATION**
SCALE : 3/8" = 1'-0"

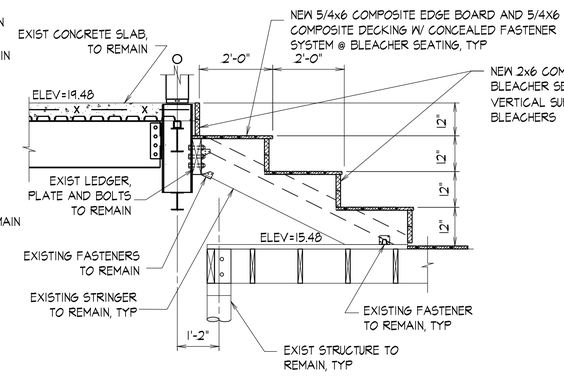

8 A3.0 **BLEACHER DETAIL**
SCALE : 1/2" = 1'-0"

1

SQUARE EDGE/EDGE BOARD (SIZES WILL VARY)
USE WITH MANUF'S RECOMMENDED EXPOSED FASTENERS FOR ALL RISERS, SKIRTING, GUARDRAILS, EDGE PROTECTION, MISC TRIM AND PIECES NOT SPECIFICALLY IDENTIFIED AS PRESSURE TREATED, AND ALL HORIZONTAL APPLICATIONS (TREADS, DECKING, ETC) WHERE THE SQUARE EDGE WOULD BE EXPOSED TO VIEW.

GROOVED EDGE/DECKING
USE WITH MANUF.'S CONCEALED FASTENERS FOR ALL DECKING, BLEACHER SEATING, AND TREADS WHERE GROOVED EDGE WOULD NOT BE EXPOSED TO VIEW.

9 A3.0 **COMPOSITE PROFILES**
SCALE : NTS

0 1'-4" 2'-8" 5'-4"
SCALE: 3/8" = 1'-0"

0 1' 2' 4'
SCALE: 1/2" = 1'-0"

allred ARCHITECTURAL GROUP
628 WASHINGTON AVENUE, SUITE C
OCEAN SPRINGS, MS 39564
PHONE: (228) 742-1975 FAX: (228) 769-9545
EMAIL: CONTACT@ALLREDARCHITECTURALGROUP.COM

ENLARGED PLAN AND DETAILS

GRAND BAY COASTAL RESOURCES CENTER DECKING
MISSISSIPPI DEPARTMENT OF MARINE RESOURCES
6005 BAYOU HERON ROAD, MOSS POINT, MISSISSIPPI 39562

APPROVED BY
APPROVED BY
APPROVED BY

JOB NUMBER 2016-17
DATE 12-13-2016
REVISED -
DRAWN BY SCN
CHECKED BY TJA

REGISTERED ARCHITECT Thomas Joseph Allred Jr. 7791 Pascagoula, MS STATE OF MISSISSIPPI
12-13-2016

SHEET **A3.0R**
OF SHEETS