# Mississippi Department of Marine Resources

| | |
|---|---|
| **SOLICITATION:** | Invitation for Bids |
| **SOLICITATION NUMBER:** | 3160003640 |
| **DESCRIPTION:** | Coffee Creek Outfall Replacement |
| **ISSUE DATE:** | **June 18, 2020** |
| **BID CLOSING LOCATION:** | Mississippi Department of Marine Resources<br>1141 Bayview Avenue<br>Biloxi, Mississippi 39530 |
| **BID COORDINATOR:** | Rick Kinnard<br>(228) 523-4147<br>procurement@dmr.ms.gov |
| **CLOSING DATE AND TIME:** | July 21, 2020 at 2:00 p.m., CST |

# TABLE OF CONTENTS

INVITATION FOR BIDS ..... INVITATION FOR BIDS
ATTACHMENT A ..... LIST OF PRIOR EXPERIENCE
ATTACHMENT B ..... MAP OF PROPOSED PROJECT AREA
ATTACHMENT C ..... BIDDER STATEMENT OF COMPLIANCE
ATTACHMENT D ..... BID FORM
ATTACHMENT E ..... INSTRUCTIONS FOR MAGIC
ATTACHMENT F ..... MDMR CONTRACT TERMS AND CONDITIONS
ATTACHMENT G ..... REQUEST TO SUBCONTRACT
ATTACHMENT H ..... MISS. CODE ANN. § 31-5-33 & MISS. CODE ANN. § 31-7-305

SECTION 00 52 15 ..... AGREEMENT
SECTION 01 20 00 ..... MEASUREMENT AND PAYMENT PROCEDURES
SECTION 01 29 00 ..... PAYMENT PROCEDURES
SECTION 01 29 73 ..... SCHEDULE OF VALUES
SECTION 01 31 00 ..... PROJECT MANAGEMENT AND COORDINATION
SECTION 01 32 00 ..... CONSTRUCTION PROGRESS DOCUMENTATION
SECTION 01 32 23 ..... SURVEYS AND LAYOUT DATA
SECTION 01 32 33 ..... PHOTOGRAPHIC DOCUMENTATION
SECTION 01 33 00 ..... SUBMITTAL PROCEDURES
SECTION 01 35 29 ..... SAFETY AND OCCUPATIONAL HEALTH REQUIREMENTS
SECTION 01 35 43 ..... ENVIRONMENTAL PROTECTION
SECTION 01 40 00 ..... CONTRACTOR QUALITY CONTROL
SECTION 01 77 00 ..... CLOSEOUT PROCEDURES

**TECHNICAL SPECIFICATIONS:**

SECTION 01550 ..... CONSTRUCTION SEQUENCE & REQUIREMENTS
SECTION 02200 ..... STRUCTURE DEMOLITION
SECTION 02240 ..... DEWATERING
SECTION 02300 ..... EARTHWORK
SECTION 02700 ..... CRUSHED STONE BASE
SECTION 03300 ..... CAST-IN-PLACE CONCRETE
SECTION 03400 ..... PRECAST CONCRETE
SECTION 05120 ..... STRUCTURAL STEEL
SECTION 05520 ..... PIPE AND TUBE RAILINGS
SECTION 06121 ..... STRUCTURAL GLUE LAMINATED TIMBERS
SECTION 07400 ..... STANDING SEAM METAL ROOF
SECTION 07920 ..... JOINT SEALANTS
SECTION 08310 ..... MANWAY ACCESS DOORS & FRAMES
SECTION 08910 ..... FIXED METAL LOUVERS
SECTION 09900 ..... HIGH-BUILD WALL COATINGS
SECTION 09960 ..... FLUID APPLIED TRAFFIC DECK COATINGS

SECTION 09970……STEEL COATINGS
SECTION 16010……. BASIC ELECTRICAL REQUIREMENTS
SECTION 16050……BASIC ELECTRICAL MATERIALS AND METHODS
SECTION 16060…….. GROUNDING AND BONDING
SECTION 16120…….. LOW VOLTAGE CONDUCTORS (600 VOLT AC)
SECTION 16130……. RACEWAYS, FITTINGS, AND SUPPORTS
SECTION 16446……. SAFETY SWITCHES
SECTION 16010……. LIGHTING

APPENDIX A..... SUBSURFACE EXPLORATION
APPENDIX B.....FINAL RELEASE OF CLAIMS
CONTRACT DRAWINGS 4.24.2020 WITH REVISIONS

# INVITATION FOR BIDS

---

**Project:** **MDMR – Coffee Creek Outfall Replacement**

**Contracting Agency:** **Mississippi Department of Marine Resources**

**To:** **Prospective Bidders**

## 1.0 PURPOSE AND STATEMENT OF WORK

The Mississippi Department of Marine Resources ("MDMR", "Agency", or "State") is seeking sealed bids for the project **"Coffee Creek Outfall Replacement"** (the "Project").

This Project is solicited by MDMR to demolish aging infrastructure on the Sand Beach and install an enclosed poured-in-place new double barrel box culvert system to include all necessary dewatering, grading, plantings and amenities to ensure and enhance proper storm drainage from Highway 90 and the surrounding areas into the Mississippi Sound.

The Project requirements are detailed in this Invitation for Bids and the Contract Documents. The Contract Documents include the Section 00 52 15 Agreement, the MDMR Standard Contract Terms and Conditions (Attachment F), the Specifications (Divisions 01, 02, 03, 05, 07, 08, 09, 16 and the Appendices), the Contract Drawings, and this Invitation for Bids (including Attachments A through H), together with any addendum that may be issued through the solicitation process. Following award of the Contract, the Contract Documents will also include the Contractor's Bid, the Notice of Award, the Notice to Proceed, the bonds required for this Project, the insurance certificates and endorsements required for this Project, and any addenda, Change Orders or modifications that may be issued. The Section 00 52 15 Agreement may be referred to as the "Agreement" or the "Contract" throughout the Contract Documents.

MDMR is seeking bidders with qualifications, experience, equipment, and labor for the work detailed herein. The selected bidder shall complete all work as specified in the Contract Documents as defined in Article 7 of the Section 00 52 15 Agreement ("Work").

The Contract will be awarded to the lowest responsible/responsive bidder whose bid meets the requirements and criteria set forth in this Invitation for Bids. The "lowest responsible/responsive bidder" is the one who supplies the lowest price for the Work as specified on the Bid Form attached hereto as Attachment "D" and meets all requirements of Section 2.7, Minimum Bid Requirements, and Section 2.10, Standards of Responsibility. MDMR reserves the right to accept or reject any or all bids. The successful bidder shall have prior experience in precast pipe and box culvert installation, concrete foundation work, dewatering, precast procurement/ installation and shall list that experience in Attachment A, List of Prior Experience.

The Contract Documents may be examined at the office of the Mississippi Department of Marine Resources, Attn: Rick Kinnard, 1141 Bayview Ave., Biloxi, MS 39530.

To obtain a downloadable copy of the Contract Documents for this Project, please visit http://www.dmr.ms.gov/index.php/procurement/procurement-main/136-bids-links/728-current-bids, email procurement@dmr.ms.gov, or call Rick Kinnard at (228)523-4147.

**If the funds anticipated for this Project are, at any time, not forthcoming or insufficient, MDMR reserves the right to terminate the Project and to not award a contract or to discontinue the Project, without damage, penalty, cost, or expense to MDMR of any kind whatsoever.**

## 2.0 SUBMISSION INSTRUCTIONS, REQUIREMENTS, CONDITIONS, DEADLINES AND NOTICES FOR BIDS

### 2.1. Issuing Office

This Invitation for Bids is issued for the State of Mississippi by MDMR. MDMR reserves the right, without qualifications to reject all bids not meeting minimum requirements and to exercise its discretion and apply its judgment with respect to any bid submitted.

### 2.2. Pre-Bid Meeting

An optional Pre-Bid Meeting will be held at 10:00 a.m., July 7, 2020, online utilizing GoToMeeting and can be accessed here, or by phone at +1 (872) 240-3212; access code: 463-770-701. The purpose of the pre-bid meeting is to allow potential bidders an opportunity to present questions to staff and obtain clarification of the procurement requirements.

**While Attendance at the Pre-Bid Meeting is not a mandatory requirement for submitting a bid, all Contractors are strongly urged to attend to gain a full working knowledge and understanding of the requirements of this project.**

### 2.3. Deadline

**All bids must be received by MDMR no later than 2:00 p.m., July 21, 2020.** All bids received after the deadline will be returned unopened. If a bid is to be mailed, bidders should use certified mail with a return receipt guaranteed. MDMR will not be responsible for mail delays or lost mail.

Bids must be labeled as follows:

**MDMR – COFFEE CREEK OUTFALL REPLACEMENT**

**Mississippi Department of Marine Resources**
**Attention: Rick Kinnard**
**1141 Bayview Avenue, 6th floor**
**Biloxi, MS 39530**

**Bidder's name:** _____

**Bidder's legal address:** _____

**Bid for Solicitation #:** _____

**Certificate of Responsibility No.**_____

**SEALED BID – DO NOT OPEN**

Bids will be opened in the presence of two (2) or more procurement officials. All written bids shall be recorded and maintained as a public record. Bids will be opened publicly and read aloud at 2:00 p.m., July 21, 2020, at the MDMR office located at 1141 Bayview Avenue, Auditorium, Biloxi, Mississippi, 39530.

Each bid must be accompanied by a Bid Bond provided by a surety licensed to operate in the State of Mississippi by the Mississippi Department of Insurance in the amount of five percent (5%) of the total bid as a bid security naming MDMR as the beneficiary. The Bid Bond shall be duly executed by the bidder, the surety, and a registered agent. Each Bid Bond must be accompanied by an appropriate Power of Attorney. Once the Contract has been executed by the successful bidder, the specified time has elapsed so that bids may be withdrawn, or all bids have been rejected, the Bonds of the unsuccessful bidders will be returned. The Bid Bond of the successful bidder will be retained until the Payment Bond and Performance Bond have been executed and approved, and the Contract has been executed, in accordance with Section 2.19 of this Invitation for Bids, after which it will be returned. If the apparent lowest responsible/responsive bidder fails to provide the appropriate Payment Bond, Performance Bond, Tax Bond, insurance certificates or does not execute the Agreement, the Bidder will forfeit his or her Bid Bond.

### 2.4. Force Majeure Event

If MDMR is closed for any reason, including but not limited to: Acts of God, strikes, lockouts, riots, acts of war, epidemics, governmental regulations superimposed after the fact, fire,

earthquakes, hurricanes, tropical storms, floods, or other natural disasters (the "Force Majeure Events"), which closure prevents the delivery of Bids by the advertised deadline, the bid submission deadline shall take place the next business day that MDMR shall be open and at the previously advertised time. The new date and time of the bid submission deadline, as determined in accordance with this section, shall not be advertised, and all bidders, upon submission of a bid submission, shall be deemed to have knowledge of and shall have agreed to the provisions of this section. Bids shall be received by MDMR until the new date and time of the bid deadline as set forth herein. **MDMR shall not be held responsible for the receipt of any bids for which the delivery was attempted and failed due to the closure of MDMR as a result of a Force Majeure Event.** Each bidder shall be required to ensure the delivery and receipt of its bid by MDMR prior to the new date and time of the bid submission deadline.

### 2.5. Nonresident Bidder

In accordance with Miss. Code Ann. § 31-3-21(3), in the letting of public contracts, preference shall be given to resident bidders, and a nonresident bidder domiciled in a state having laws granting preference to local contractors shall be awarded Mississippi public contracts only on the same basis as the nonresident bidder's state awards contracts to Mississippi contractors bidding under similar circumstances; and resident bidders actually domiciled in Mississippi, be they corporate, individuals, or partnerships, are to be granted preference over nonresidents in awarding of contracts in the same manner and to the same extent as provided by the laws of the state of domicile of the nonresident. **When a nonresident bidder submits a bid for a public project, he shall attach thereto a copy of his resident state's current law pertaining to such state's treatment of nonresident contractors. Any bid submitted by a nonresident bidder which does not include the nonresident contractor's current state law shall be rejected and not considered for award. In order to clarify that no law exists, the bidder will include with the bid a statement on letterhead and signed by the same person who signs the *Bid Form* stating that no preference laws exist in that state.**

### 2.6. Magic

Effective July 1, 2014, the State of Mississippi requires vendors to register in Mississippi's Accountability System for Government Information and Collaboration ("MAGIC") for the State to execute a contract and/or pay for services/products. (*See* Attachment E).

### 2.7. Minimum Bid Requirements

Bids shall contain the following minimum information:

**A.** One (1) original and 2 copies shall be submitted along with one pdf copy on a flash drive.

**B.** Fully completed and/or executed copies of Attachments A, C, and D, attached hereto.

**C.** The written information for a responsibility determination in accordance with Section 2.10, Standards of Responsibility, in this Invitation for Bids.

**D.** A copy of bidder's current Certificate of Responsibility issued by the State of Mississippi for the type of work to be performed under this Invitation for Bids, pursuant to Miss Code Ann. § 31-3-21(1) and (2). **The Certificate of Responsibility number must appear on the exterior of the bid envelope.**

**E.** A copy of the bidder's current Certificate of Good Standing from the Mississippi Secretary of State.

**F.** If the bidder is a non-resident contractor, a copy of bidder's **current** state bidder preference law pertaining to that State's treatment of non-resident contractors, pursuant to Miss. Code Ann. § 31-3-21(3) or a statement on letterhead and signed by the same person who signs the Bid Form stating that no preference laws exist in that state. The State of Residency of a contractor shall be the same as the corporate office as reported by the Mississippi Secretary of State's office.

**G.** A Bid Bond in the amount of five percent (5%) of the bid amount naming MDMR as the beneficiary and meeting the requirements of Section 2.3 of this Invitation for Bids.

### 2.8. Response to Inquiries

All questions regarding this Invitation to Bids must be submitted in writing to Rick Kinnard via email at procurement@dmr.ms.gov or by mail to 1141 Bayview Ave., Attn: Procurement, Biloxi, MS 39530 and must be received by MDMR by 2:00 p.m., CST, July 10, 2020. Questions submitted after this date will not be considered. Bidders shall provide an email address or fax number for MDMR to direct the consolidated "question and answer" document. MDMR answers will be provided in writing and transmitted via email or fax to all prospective bidders who are known to have requested and received a copy of the bid package. Only answers transmitted in this manner will be considered official and valid by MDMR. No negotiations, decisions, or actions shall be initiated by any bidder as a result of any verbal discussion with any State or Agency representative.

### 2.9. Proprietary Information/Mississippi Public Records Act

Bids will be made available for inspection only after award of the Contract. For this reason, proprietary material should be clearly labeled as such. The classification of an entire bid as proprietary or trade secret is not acceptable and may result in rejection of the bid. Requests to review proprietary information will be handled in accordance with state law and applicable procedures. All disclosures of bid information to interested parties will be made in compliance with MDMR policies and procedures established in accordance with the Mississippi Public Records Act of 1983, Miss. Code Ann. §§ 25-61-1 et seq., and exceptions found in Miss. Code Ann. §§ 25-61-9 and 79-23-1.

### 2.10. Standards of Responsibility

MDMR will receive bids from firms having specific experience and qualifications in the area identified in this solicitation. For consideration, bids for the project must contain evidence of the firm's experience and abilities in the specified area and other disciplines directly related to the proposed service. Other information required by MDMR may be included elsewhere in the solicitation. Unless otherwise stated, all bidders shall provide references, illustrative examples of similar work performed, and any other information that clearly demonstrates the bidders' expertise in the area of the solicitation.

A selection committee shall review and evaluate all bids. It is therefore important that bidders emphasize specific information pertinent to the work. The contract will be awarded to an experienced applicant that meets or exceeds the qualifications set forth in the IFB. Factors that will be considered in determining whether the **Standard of Responsibility** has been met include whether a bidder has:

**A.** A satisfactory record of relevant experience (5 points)

On Attachment A, provide references and contact information for, at a minimum, three (3) previous projects within the past five (5) years of like nature to the Work solicited under this Invitation for Bids. Like nature projects may include the following:

a. Piping repair/installation projects directly for the Harrison County Sand Beach Authority;
b. Large Utility Piping projects on or near the MS Sand Beach where high water tables were encountered;
c. Large Cast in Place Box Culvert projects on or near the MS Sand Beach where high water tables were encountered;
d. Projects that included beach grading and/or dune construction including planting of dune grasses.

**B.** A commercial working-knowledge of the requirements of this Project on the Mississippi Sand Beach, to be expressed in a written Work Plan that includes a start date, and explains the methods and procedures the contractor proposes to follow to complete the Project, including an explanation of how the contractor:

a. logistically plans to attack the project;

b. will sequence work activities to maintain an uninterrupted flow of storm water discharge off of Highway 90 and minimize dewatering efforts;

c. will comply with the environmental protection requirements of this Project;

d. will access the site(s) and provide an equipment usage plan; and,

e. will identify the site superintendent with his qualifications for this project.

Bidders should submit a written narrative of twelve (12) pages or less for this factor B. The

written narrative shall disclose the subcontractors the bidder intends to use, their key personnel, their contact information, their DUNS number and their intended scope of work. The written narrative pages should be numbered in consecutive order. Attachments A, C, and D will not count against the page number of such written narrative. (10 points)

**C.** A satisfactory record of integrity (5 points)

a. Provide, at a minimum, five (5) references and contact information for persons and/or firms familiar with the business integrity of the bidder.

**D.** A satisfactory record of performance (5 points)

a. Provide a listing of all storm water infrastructure projects within the past three (3) years and identify the completion dates (scheduled and actual) and whether the project resulted in construction claims associated with defective work, defaulted or required action by the bonding company. A bidder will not be penalized for claims won by the Bidder.

The burden is on the prospective bidder to thoroughly demonstrate its responsibility in the above-listed categories. Any bidder with an overall score of ten (10) points or below, or a score of two (2) points or below in categories A, C and D, or a score of four (4) points or below in Category B, on the above Standards of Responsibility will be deemed non-responsible and will be rejected**.**

The Contract will be awarded to the lowest responsible/responsive bidder whose bid meets the requirements and criteria set forth in this Invitation for Bids. The "lowest responsible/responsive bidder" is the one who supplies the lowest price for the Base Bid Work as specified on the Bid Form attached hereto as Attachment "D" and meets all requirements of the Minimum Bid Requirements and the Standards of Responsibility. The MDMR reserves the right to reject any or all bids and to independently verify all of the above, and if necessary, require additional information from bidders. Failure to comply with all the information required in this bid may render the bid non-responsive and may result in its rejection.

### 2.11. Waiver of Informalities or Rejection of Bids

MDMR may waive any informalities or minor defects, or reject any and all bids. Any bid may be rejected in whole or in part when such rejection is determined to be in the best interest of MDMR. Waivers, when granted, shall in no way modify the Invitation for Bids requirements or excuse a party from full compliance with the Invitation for Bids specifications and other requirements if the party is awarded the Contract. Reasons for rejecting a bid include, but are not limited to:

**A.** Failure to comply with the requirements of the Invitation for Bids and any of its Addenda;

**B.** Bidder is in arrears on existing contracts with MDMR or another governing authority or

state agency;

**C.** Bidder is, anticipates being, or has been within the last five (5) years in litigation or arbitration with MDMR or another governing authority or a state agency;

**D.** Bidder has defaulted on a previous contract;

**E.** The bid contains unauthorized amendments to the requirements of the Invitation for bids;

**F.** The bid is conditional or qualified;

**G.** The bid is incomplete or contains irregularities, which make the bid indefinite or ambiguous;

**H.** The bid is not signed by an authorized representative of the party;

**I.** The bid contains false or misleading statements or references;

**J.** The bidder is determined to be non-responsible;

**K.** The bid ultimately fails to meet the announced requirements of the State in some material aspect;

**L.** The bid price is clearly unreasonable;

**M.** The bid is not responsive, i.e., does not conform in all material respects to the Invitation for Bids; and,

**N.** The work or materials offered in the bid are unacceptable by reason of its failure to meet the requirements of the specifications or permissible alternative or other acceptability criteria set forth in the Invitation for Bids.

### 2.12. Disposition of Bids

All bids submitted and opened become the property of the State of Mississippi.

### 2.13. Conditions of the Solicitation

The release of this Invitation of Bids does not constitute an acceptance of any offer, nor does such invitation in any way obligate MDMR to execute a contract with any party. MDMR reserves the right to accept, reject, or negotiate any or all offers on the basis of the evaluation criteria contained within this document. The final decision to execute a contract with any party rests solely with MDMR.

Before preparing the bid, all parties should note:

**A.** MDMR accepts no responsibility for any expenses incurred by the bidder in the preparation and presentation of a bid. Such expenses shall be borne exclusively by the bidder.

**B.** The award of a contract for any bid is contingent upon the following:

1. Favorable evaluation of the bid;

2. Availability of funds; and,
3. Approval of the Public Procurement Review Board.

**C.** Contracted parties will be required to assume full responsibility for all specified services, materials, labor and equipment, and may subcontract only as specified in Attachment F, "MDMR Standard Contract Terms and Conditions," herein.

**2.14. Withdrawal of Bids**

Any bid may be withdrawn prior to the above-scheduled time for the submission of bids or authorized postponement thereof. Further, no bidder may withdraw a bid within ninety (90) days after the actual date of the bid opening.

**2.15. Bid Modification Requests**

Any requests to modify bids must be submitted in writing by the primary bidder. All requests for modification must be submitted prior to the submission deadline for the receipt of the sealed bids.

**2.16. Addenda to Bid Specifications**

MDMR reserves the right to issue addenda to this Invitation for Bids. If an addendum becomes necessary, MDMR will provide copies of the addendum to all persons known to have requested a copy of the bid package via the MDMR Procurement Office email, mail, or fax.

**2.17. Acknowledgement of Addendum**

Bidders shall acknowledge receipt of any addendum to the Invitation for Bids and/or the Contract Documents by signing and returning the addendum with the bid and by identifying the addendum number and date in the space provided for this purpose on the Bid Form attached hereto as Attachment "D." The acknowledgement must be received by MDMR by the time and at the place specified for receipt of sealed bids.

**2.18. Information Regarding References**

The bidder understands and agrees that MDMR reserves the right to request information from bidder's references and may contact same.

**2.19. Performance, Payment, and Tax Bonds**

Within ten (10) calendar days after receipt of the Notice of Award and Contract, the successful contractor shall execute and deliver to MDMR performance and payment bonds pursuant to Miss. Code. Ann. § 31-5-51, each in the amount of one hundred percent (100%) of the Contract Price, payable to the Mississippi Department of Marine Resources and conditioned for the faithful performance of the Contract and for the prompt payment of all persons supplying labor or material used in the prosecution of the Work under the Contract, with a surety qualified to do business in Mississippi and listed on the United States Treasury Department's list of acceptable sureties and approved by MDMR. MDMR shall be named as the indemnitee in the Performance Bond. A Tax

Bond, pursuant to Miss. Code Ann. § 31-5-3, securing the prompt payment of taxes, licenses, assignments, contributions, damages, penalties, and interest thereon incurred in connection with the performance of the Contract shall be provided to MDMR before commencing Work under the Contract. Attorneys-in-fact who sign Payment Bonds, Performance Bonds, and Tax Bonds must file with each Bond a certified and effective dated copy of their power of attorney.

### 2.20. Award of Contract

If MDMR makes an award for the Project, MDMR will do so within ninety (90) days after opening the bids. Should there be any reason why the Contract cannot be awarded within ninety (90) days after bid opening, the time may be extended by written mutual agreement between MDMR and the successful bidder. The Notice of Award shall be accompanied by the Contract. Actions taken by a bidder prior to final execution of such Contract will be at the bidder's OWN RISK and MDMR will not be liable for such action. The party to whom the Contract is awarded will be required to execute the Contract and obtain the Performance Bond and Payment Bond within ten (10) calendar days from the date when Notice of Award is delivered to the bidder and the Tax Bond shall be provided prior to commencing work under the Contract. In case of failure of the bidder to execute the Contract or submit other required documents, MDMR may award the Contract to the next lowest and best responsible/responsive bidder whose bid meets the requirements and criteria set forth in this Invitation for Bids, without relieving the bidder initially selected for award and its bonding company providing the Bid Bond from their liability to MDMR for such failure.

Within thirty (30) days of receipt of an acceptable Performance Bond, an acceptable Payment Bond, and the Contract signed by the party to whom the Contract was awarded, MDMR shall sign the Contract. When the Contract is fully executed, an executed duplicate of the Contract shall be returned to the bidder. Should MDMR not execute the Contract within thirty (30) days from receipt of an acceptable Performance Bond, an acceptable Payment Bond and the Contract, the bidder may, by Written Notice, withdraw bidder's signed Contract. Such notice of withdrawal shall be effective upon receipt of the notice by MDMR.

Subject to receipt of an acceptable Tax Bond, a Notice to Proceed is anticipated to be issued in August 2020.

### 2.21. Equal Opportunity

Contracts, grants, loans, purchases and all other financial transactions are administered by MDMR equally to all without regard to race, color, creed, sex, religion, national origin, disability, or age. In addition, the bidder understands that MDMR is an equal opportunity employer and maintains a policy that prohibits unlawful discrimination based on race, color, creed, sex, age, national origin, physical handicap, disability, or any other unlawful consideration. During the term of the Contract, the contractor must strictly adhere to this policy in its employment practices and provision of services.

### 2.22. Applicable Laws

The bidder is responsible for complying with all applicable federal, state, and local laws and regulations.

### 2.23. Governing Law

This solicitation and any resulting contract shall be governed in all respects by the laws of the State of Mississippi, and any litigation with respect thereto shall be brought in the appropriate state court located in Biloxi, Harrison County, Mississippi.

### 2.24. Certification of Independent Price Determination

Bidder shall execute, notarize and attach the Bidder Statement of Compliance (Attachment C) to its Bid, certifying that the prices submitted in response to the solicitation have been arrived at independently and without any consultation, communication or agreement (for the purpose of restricting competition) with any other bidder or competitor relating to those prices, the intention to submit a bid, or the methods or factors used to calculate the prices proposed.

### 2.25. Procurement Regulations

Any resulting contract shall be governed by the applicable provisions of the Public Procurement Review Board regulations.

### 2.26. Contract Documents

Bidders are advised that this Invitation for Bids, any issued Addenda and related Contract Documents (including the Specifications and Drawings) and their bid, should it be accepted, will become part of the final Contract. In the event of any *conflict* between the terms appearing in the Contract Documents, the provisions of Article 7 of the Agreement (Section 00 52 15) included in this Invitation for Bids shall apply to resolve the conflict.

## 3.0 PERIOD OF PERFORMANCE

The period of performance for this Contract ("Contract Time") shall commence upon issuance of a Notice to Proceed by MDMR. A Notice to Proceed is anticipated to be issued in March 2019. The successful contractor will be allowed a total of 180 calendar days to complete all construction activities. The successful contractor must begin work within seven (7) calendar days of any such Notice to Proceed. Liquidated Damages in the amount of $1,500/day shall be assessed for each day the Work is not complete beyond the allowed 180 calendar days.

## 4.0 INSURANCE REQUIREMENTS

The successful contractor shall maintain during the time of the Contract the liability insurance coverage required by Section 31 of the MDMR Standard Contract Terms and Conditions, and shall require its subcontractors to maintain said coverage, related to the work of the successful contractor and in connection with the Contract.

## 5.0 RELATIONSHIP OF PARTIES

All parties expressly understand and agree that MDMR enters into a contract with a contractor based on the work performed pursuant to the Contract and not based on an employer-employee relationship or a joint venture relationship. For all purposes under this Contract: The successful contractor shall not be deemed in any way, directly or indirectly, expressly, or by implication, to be an employee of MDMR. The successful contractor will be an independent contractor.

## 6.0 CONTRACT ADMINISTRATION

The Contract awarded subsequent to this solicitation shall be administered by MDMR.

The MDMR Engineer for this Project is as follows:

**Covington Civil and Environmental**
**Attention: Ben Benvenutti**
bbenvenutti@cce.ms (by email)
**2510 14th Street**
**Suite 1010**
**Gulfport, MS 39501**

## 7.0 COMPENSATION

Compensation for the Work performed pursuant to the Contract will be in the form of unit prices and lump sum basis as defined in the Bid Form. Payment Applications may be submitted on a monthly basis in accordance with the **Agreement** (Section 00 52 15) and an approved schedule of values.

## 8.0 CONTRACT TERMS AND CONDITIONS

The awarded Contract will include, but is not limited to, the MDMR Standard Contract Terms and Conditions, a copy of which is attached hereto as Attachment F.

## 9.0 LIST OF ATTACHMENTS AND FORMS

The following are included as attachments to this Invitation for Bids.

Attachment A – List of Prior Experience

Attachment B – Map of Proposed Project Area

Attachment C – Bidder Statement of Compliance

Attachment D – Bid Form

Attachment E – Instructions for MAGIC

Attachment F – MDMR Standard Contract Terms and Conditions

Attachment G – Request to Subcontract

Attachment H – A Copy of Miss. Code Ann. §31-5-33 and §31-7-305

Section 00 52 15 – Agreement

Division 01 Specifications

Division 02 Specifications

Division 03 Specifications

Division 05 Specifications

Division 06 Specifications

Division 07 Specifications

Division 08 Specifications

Division 09 Specifications

Division 16 Specifications

Appendices A-B

Contract Drawings

# ATTACHMENT A

## List of Prior Experience

The Bidder must complete this Attachment to include its prior experience in the type of work solicited under this Invitation for Bids.

Date Work Performed: _____

Agency: _____

Agency Contact Name: _____

Agency Contact Phone Number:_____

Name of Project: _____

Address of Project: _____

Scope of Project: _____

Client Name: _____

Client Phone Number: _____

Work Performed by Bidder [ ] or Subcontractor [ ]

If subcontractor, list subcontractor name: _____

Date Work Performed: _____

Agency: _____

Agency Contact Name: _____

Agency Contact Phone Number:_____

Name of Project: _____

Address of Project: _____

Scope of Project: _____

Client Name: _____

Client Phone Number: _____

Work Performed by Bidder [ ] or Subcontractor [ ]

If subcontractor, list subcontractor name: _____

Date Work Performed: _____

Agency: _____

Agency Contact Name: _____

Agency Contact Phone Number:_____

Name of Project: _____

Address of Project: _____

Scope of Project: _____

Client Name: _____

Client Phone Number: _____

Work Performed by Bidder [ ] or Subcontractor [ ]

If subcontractor, list subcontractor name: _____

Date Work Performed: _____

Agency: _____

Agency Contact Name: _____

Agency Contact Phone Number:_____

Name of Project: _____

Address of Project: _____

Scope of Project: _____

Client Name: _____

Client Phone Number: _____

Work Performed by Bidder [ ] or Subcontractor [ ]

If subcontractor, list subcontractor name: _____

# ATTACHMENT B

## Map of Proposed Project Area

# ATTACHMENT C

## Bidder Statement of Compliance

State of _____

County of _____

I, _____, individually, and in my capacity as _____ of _____ (Bidder), being first duly sworn, on oath depose and state the following on behalf of the company:

**Bidder's Representation Regarding Contingent Fees**

Bidder represents as a part of its Bid that such Bidder has not retained any person or agency on a percentage, commission, brokerage, or other contingent arrangement to secure this Contract.

**Bidder's Non-Collusion Certification**

Bidder, and its officers, partners, owners, agents, representatives, employees, suppliers, subcontractors, or parties in interest have not in any way colluded, conspired, or agreed directly or indirectly with any other Bidder, supplier, subcontractor, firm, or person to:

a) Fix prices in the attached Bid or for other Bidders;

b) Fix or make arrangements to restrict land use availability or lease/rental prices for this Bid or for other Bidders; or

c) Fix any overhead, profit or cost elements for this Bid or for other Bidders.

**Bidder History, Debarment and Suspension Representations**

Bidder certifies that Bidder and its corporate officers, principal owners, managers, auditors, and others in a position of administering governmental funds:

a) Are not presently debarred, suspended, proposed for debarment, declared ineligible, or voluntarily excluded from covered transactions by any governmental department or agency;

b) Have not within a three-year period preceding this proposal been convicted of or had a civil judgment rendered against them for commission of fraud or a criminal offense in connection with obtaining, attempting to obtain, or performing a public (Federal, State or local) transaction or contract under a public transaction;

c) Have not within a three-year period preceding this proposal been convicted of or had a civil judgment rendered against them for violation of Federal or State antitrust statutes or commission of embezzlement, theft, forgery, bribery, falsification or destruction of records, making false statements, or receiving stolen property;

d) Are not presently indicted for or otherwise criminally or civilly charged by a governmental entity (Federal, State or local) with commission of any of the offenses enumerated in b) and c) above; and,

e) Have not within a three-year period preceding this proposal had one or more public transactions (Federal, State or local) terminated for cause or default.

**No Conflict of Interest**

Bidder further certifies that, to the best of its knowledge and belief, there are no present or currently planned interests (financial, contractual, organizational, or otherwise) relating to the work to be performed under any contract or task order resulting from this Bid that would create any actual or potential conflict of interest (or apparent conflicts of interest) (including conflicts of interest for immediate family members: spouses, parents, children) that would impinge on its ability to render impartial, technically sound, and objective assistance or advice or result in it being given an unfair competitive advantage. In this clause, the term ‘‘potential conflict’’ means reasonably foreseeable conflict of interest. Bidder further certifies that it has and will continue to exercise due diligence in identifying and removing or mitigating, to the State’s satisfaction, such conflict of interest (or apparent conflict of interest). Bidder further certifies that it has no conflict of interest with respect to MDMR or the work to be performed (as set forth in the Invitation for Bids and accompanying Contract Documents).

By submission of this Bid, I have agreed to adhere to **all conditions and requirements**, as set forth in MDMR’s Invitation for Bids and Contract Documents, including all the terms and conditions in the Contract Documents. I further understand that my failure to comply with all requirements and qualifications will result in disqualification of my Bid relative to this procurement action. I have submitted appropriate documentation and a completed Bid Form as necessary to substantiate the evaluation of my bid. If inadequate, my Bid will not meet the Bid requirements and will be determined to be either non-responsive or non-responsible.

MDMR reserves the right to reject any and/or all bids and to waive any minor informalities.

All of the foregoing is true and correct:

Bidder: _____

Date: _____

Authorized Signature: _____

Name: _____

Typed/Printed

Title: _____

SWORN TO AND SUBSCRIBED before me, this the ____ day of_____, 20_____.

_____

NOTARY PUBLIC

My Commission Expires: [SEAL]

_____

# ATTACHMENT D

## Bid Form

### 1.0 BID RECIPIENT

This Bid is submitted by _____ (hereinafter called "Bidder") doing business as a _____ (insert "a corporation," "an individual" as applicable; if a corporation, indicate state of incorporation; or a "joint venture") to:

**Mississippi Department of Marine Resources**
**Attention: Rick Kinnard**
**1141 Bayview Avenue**
**Biloxi, Mississippi 39530**

The undersigned Bidder proposes and agrees, if this Bid is accepted, to enter into a Contract with Mississippi Department of Marine Resources (hereinafter called "MDMR") in the form included in the Invitation for Bids to perform all Work as specified or indicated in the Contract Documents for the prices and within the times indicated in this Bid and in accordance with the other terms and conditions of the Contract Documents.

### 2.0 BIDDER'S ACKNOWLEDGEMENTS

Bidder accepts all of the terms and conditions of the Invitation for Bids, including without limitation those dealing with the disposition of Bid security. This Bid will remain subject to acceptance for ninety (90) days after the Bid opening or for such longer period of time that Bidder may agree to in writing upon request of MDMR. Should the Base Bid be accepted by MDMR, all Alternate pricing shall remain good for 120 days and all offered unit prices shall be good for the life of the contract.

### 3.0 BIDDER'S REPRESENTATIONS

In submitting this Bid, Bidder represents that:

**A.** Bidder has examined and carefully studied the Contract Documents, including the Invitation for Bids, and the following addenda, receipt of which is hereby acknowledged:

| Addendum No. | Addendum Date |
|---|---|
| _____ | _____ |
| _____ | _____ |
| _____ | _____ |

**B.** Bidder has reviewed the requirements to bid this Project and become familiar with and is satisfied as to the general, local, and site conditions that may affect cost, progress, and performance of the Work.

**C.** Bidder is familiar with and is satisfied as to all laws and regulations that may affect cost, progress, and performance of the Work.

**D.** Bidder has considered the information known to Bidder; information commonly known to contractors doing business in the locality of the work site; information and observations obtained from visits to the work site; the Invitation for Bids; and the site-related reports and drawings identified in the Invitation for Bids with respect to the effect of such information, observations, and documents on (1) the cost, progress, and performance of the Work; (2) the means, methods, techniques, sequences, and procedures of construction to be employed by Bidder, including applying the specific means, methods, techniques, sequences, and procedures of construction expressly required by the Contract Documents; and (3) the Bidder's safety precautions and programs.

**E.** Based on the information and observations referred to above, Bidder does not consider that further examinations, investigations, explorations, tests, studies, or data are necessary for the determination of this Bid for performance of the Work at the price(s) bid and within the times required and in accordance with the other terms and conditions of the Contract Documents.

**F.** Bidder is aware of the general nature of work to be performed at the site that relates to the Work as indicated in the Contract Documents.

**G.** Bidder has given MDMR written notice of all conflicts, errors, ambiguities, or discrepancies that Bidder has discovered in the Contract Documents, (including, but not limited to, the Drawings and Specifications), and the written resolution thereof by MDMR is acceptable to Bidder.

**H.** The Invitation for Bids is generally sufficient to indicate and convey understanding of all terms and conditions for the performance of the Work for which this Bid is submitted.

## 4.0 BID FORM INSTRUCTIONS

All blank spaces for the bid prices must be filled in ink or typewritten, and this Bid Form must be fully completed and executed when submitted. Alterations and erasures of the entries made by bidder shall be initialed by the individual who signed this Bid Form. Bids shall state the legal name of bidder and be signed by the person or persons legally authorized to bind bidder to a contract. Bids submitted by a corporation shall indicate state of incorporation and bear a corporate seal. Bids submitted by an agent of a bidder shall have a current power of attorney attached that certifies the agent's authority to bind the bidder.

Measurement and payment procedures corresponding to the Bid Form can be found in **Section 00 52 15** Agreement, **Section 01 20 00** Measurement and Payment Procedures, and **Section 01 29 00** Payment Procedures of the Contract Documents.

**Coffee Creek Outfall Replacement**
**Mississippi Department of Marine Resources**
**1141 Bayview Avenue - Biloxi, Mississippi 39530**

| **BID SCHEDULE - BASE BID** | | |
|---|---|---|
| | All work pertaining to the installation and construction of the Cast in Place Box Culvert System, Pavilion, Lighting and main Stairways as shown on the drawings. | |
| | TOTAL – BASE BID ($) | |

| **ADD ALTERNATE #1** | | |
|---|---|---|
| | All labor, materials and equipment to perform the installation of the Concrete flatwork, Handicap Ramp with associated railings and steps to the west of the west exterior wall of the Box Culvert System. | |
| | TOTAL – ADD ALTERNATE #1 | |

| **ADD ALTERNATE #2** | | |
|---|---|---|
| | All labor, materials and equipment to perform the installation of the Concrete flatwork, Handicap Ramp with associated railings and steps to the east of the eastern exterior wall of the Box Culvert System. | |
| | TOTAL – ADD ALTERNATE #2 | |

| **ADD ALTERNATE #3** | | |
|---|---|---|
| | All labor, materials and equipment to perform the installation of the 3(ea) Firepits as indicated on the drawings. | |
| | TOTAL – ADD ALTERNATE #3 | |

BIDDER TO PROVIDE UNIT PRICES FOR THE FOLLOWING ADDITIONAL ITEMS THAT ARE TO BE USED IN THE FIELD IF NECESSARY, ONLY WITH PRIOR WRITTEN APPROVAL FROM THE OWNER AND/OR ENGINEER. PRICES SHALL INCLUDE ALL SHIPPING, HANDLING AND COMPLETE INSTALLATION IN ACCORDANCE WITH THE PLANS AND SPECIFICATIONS:

| Item No. | Unit | Description | Unit Price/Unit |
|---|---|---|---|
| 1 | Tons | #57 AASHTO Stone | |
| 2 | Tons | 3x6 Gabion Stone | |
| 3 | Tons | MDOT 100 lb. Rip Rap | |
| 4 | CY | Select Sand Fill | |
| 5 | CY | Undercut Excavation & Waste on Beach | |
| 6 | CY | Undercut Excavation and Haul off Site | |
| 7 | SY | Non-Woven (8oz) Geo Textile Fabric | |
| 8 | SY | Geo Grid – Tensar TX160 or Equal | |
| | | | |
| | | | |
| | | | |
| | | | |
| | | | |

***SIGNATURE STATEMENT'**

BIDDER ACKNOLWEDGES THAT HE/SHE HAS CHECKED ALL ITEMS IN THIS PROPOSAL FOR ACCURACY AND CERTIFY THAT THE FIGURES THEREIN CONSTITUTE THEIR OFFICIAL BID.

BIDDER'S SIGNATURE: _____

(Printed Name/Title)

Total Aggregate Numerical Amount of Bid for **COFFEE CREEK OUTFALL REPLACEMENT**

Construction $ _____

Written Total Amount of Bid

**Note**: Bids shall include sales tax and all other applicable taxes and fees. All blanks shall be filled in. Total amount of Bid shall be the sum of the Items. Contract Award will be made according to the Invitation for Bids. In case of discrepancy between the sum of the items and Total Amount of Bid, the sum of the items shall be considered to be the Total Amount of Bid. Award will be made to only one Bidder based upon the Base Bid as applicable from this Bid Form and determination of the lowest and best, responsive, responsible bidder according to the Invitation for Bids.

1. The Bidder agrees that the Work shall be completed within 180 calendar days as stipulated in the Agreement.
2. The following documents are attached to and made a condition of this Bid:
    a. Bid Security (surety bond, cashier's check, or certified check);
    b. Power of Attorney (For Surety Bond only);
    c. Authority to Execute Contract (any corporate employee other than the president or vice-president); and
    d. A list of all subcontractors, surveyors and suppliers associated with this Bid.

The undersigned, having read and understood the Contract Documents and examined the Project site and adjoining areas and being familiar with the obstacles and conditions that will affect proposed Work, hereby offers and agrees to furnish all labor, equipment and materials and to perform all the Work required for the Coffee Creek Outfall Replacement Project in accordance with the Contract Documents and at the prices stated in the preceding Schedule of Prices above.

This Bid is submitted by:

If Bidder is:

**<u>An Individual</u>**

Name: _____

(Typed or Printed)

By: _____

(Individual's Signature)

Doing business as: _____

State Contractor License No. _____

**A Partnership**

Partnership
Name: _____
(Typed or Printed)

By: _____
(Signature of General Partner – attach evidence of authority to sign)

Name: _____
(Typed or Printed)

State Contractor License No. _____

**A Corporation**

Corporation Name: _____

(Seal)

State of Incorporation: _____

Type (General Business, Professional, Service, Limited Liability):_____

By: _____
(Signature, attach evidence of authority to sign)

Name: _____
(Typed or Printed)

Title: _____
(Corporate Seal)

Attest: _____

Date of Qualification to do business in Mississippi is ___/___/___.

State Contractor License No. _____

**A Joint Venture**

Name of Joint Venture: _____

First Joint Venture Name: _____

(Seal)

By: _____

(Signature of first Joint Venture Partner, attach evidence of authority to sign)

Name: _____

(Typed or Printed)

Title: _____

Bidder's Business Address: _____

_____

_____

Phone No. _____

Email:_____

Submitted on _____, 20_____

State Contractor License No. _____

# ATTACHMENT E

## Instructions for MAGIC

**TO:** Vendors for the State of Mississippi

**FROM:** Mississippi Department of Marine Resources
Office of Procurement

**SUBJECT:** Instructions to register as Supplier

Effective July 1, 2014, the State of Mississippi requires vendors to register in MAGIC for the State to execute a contract and/or pay for services/products.

Please complete the online registration at this address:

http://www.dfa.ms.gov/dfa-offices/mmrs/mississippi-suppliers-vendors/

Should you have any questions concerning the registration process, contact the Mash Help Desk at (601) 359-1343, option 2 or email via mash@dfa.ms.gov.

Thank you for your time and attention to this matter. The process could take up to 72 hours to complete.

Mississippi Department of Marine Resources

Office of Procurement

# ATTACHMENT F

## MDMR Contract Terms and Conditions

## Applicable to All Work

## 1.0 AVALABILITY OF FUNDS.

It is expressly understood and agreed that the obligation of MDMR to proceed under this Agreement is conditioned upon the receipt of funds from the Mississippi State Legislature and/or the appropriation of funds by the Mississippi State Legislature for this Project. If the funds anticipated for the continuing fulfillment of the agreement are, at any time, not forthcoming or insufficient, either through the failure of the federal government to provide funds or of the State of Mississippi to appropriate funds or the discontinuance or material alteration of the program under which funds were provided or if funds are not otherwise available to State, MDMR shall have the right upon ten (10) working days written notice to the Contractor, to terminate this agreement without damage, penalty, cost or expenses to MDMR of any kind whatsoever. The effective date of termination shall be as specified in the notice of termination.

## 2.0 REPRESENTATIVES

For all matters pertaining to the Work, unless otherwise provided, MDMR will be represented by its Executive Director, or a designated representative, in all administrative matters and by the designated "Engineer" in all technical matters. When MDMR is referenced singularly in these Standard Contract Terms and Conditions, it shall be construed to include MDMR's Executive Director and its designated representative(s) for the Project.

Before commencement of the Work, Contractor shall notify MDMR and Engineer of the name of the person(s) ("Contractor's Representative") who shall be on-site at all times when the Work is being performed, who shall directly superintend the Work and who shall be the duly authorized Representative of Contractor empowered to make decisions for, and on behalf of Contractor, and to execute Change Orders on behalf of Contractor, and to whom orders and directions by MDMR and Engineer to Contractor may be given.

At all times when any performance of the Work at any site is being conducted by any employee or representative of the Contractor or his subcontractors, the Contractor shall have a Contractor's Representative present at each site who has the capability of receiving instructions in the English language, fluently speaks the English language and can explain the work operations to persons performing the Work in the language that those performing the Work are capable of understanding. MDMR or its designated Engineer shall have the right to determine whether the proposed representative has sufficient technical and bilingual capabilities, and the Contractor shall immediately replace any individual not acceptable to MDMR or its designated Engineer.

## 3.0 AUTHORITY OF ENGINEER

If designated by MDMR, the designated Engineer shall decide any and all questions which may arise as to (1) the quality or acceptability of materials furnished and the Work performed; (2) the manner of performance of the Work; and (3) interpretation of technical matters within the Contract Documents.

## 4.0 AUTHORITY TO CONTRACT

Contractor warrants (a) that it is a validly organized business with valid authority to enter into this agreement; (b) that it is qualified and registered to do business and is in good standing in the State of Mississippi; (c) that entry into and performance under this Agreement is not restricted or prohibited by any loan, security, financing, contractual, or other agreement of any kind; and (d) notwithstanding any other provision of this Agreement to the contrary, that there are no existing legal proceedings, either voluntary or otherwise, which may adversely affect its ability to perform its obligations under this Contract.

## 5.0 EMPLOYMENT STATUS

Contractor shall, at all times, be regarded as and shall be legally considered an independent Contractor and shall at no time act as an agent for MDMR. Nothing contained herein shall be deemed or construed by MDMR, Contractor, or any third party as creating the relationship of principal and agent, master and servant, partners, joint venturers, employer and employee, or any similar such relationship between MDMR and Contractor. Neither the method of computation of fees or other charges nor any other provision contained herein nor any acts of MDMR or Contractor hereunder creates, or shall be deemed to create a relationship other than the independent relationship of MDMR and Contractor.

Contractor's personnel shall not be deemed in any way, directly or indirectly, expressly or by implication, to be employees of MDMR. Neither Contractor nor its employees shall, under any circumstances, be considered servants, agents, or employees of MDMR, and MDMR shall be at no time legally responsible for any negligence or other wrongdoing by Contractor, its servants, agents, or employees. MDMR shall not withhold from the Contract payments to Contractor any federal or state unemployment taxes, federal or state income taxes, Social Security tax, or any other amounts for benefits to Contractor. Further, MDMR shall not provide to Contractor any insurance coverage or other benefits, including Worker's Compensation, normally provided by MDMR or the State for its employees.

## 6.0 CONTRACTOR'S PERSONNEL

MDMR shall, throughout the life of the Contract, have the right of reasonable rejection and approval of staff or subcontractors assigned to the Work by Contractor. If MDMR reasonably rejects staff or subcontractors, Contractor must provide replacement staff or subcontractors satisfactory to MDMR in a timely manner and at no additional cost to MDMR. The day-to-day supervision and control of Contractor's employees and subcontractors is the sole responsibility of

Contractor. Contractor must receive pre-approval from MDMR prior to subcontracting with any company and/or individual not listed as a subcontractor in the bid submittal. The Request to Subcontract form is attached in Appendix G.

## 7.0 DRUG-FREE WORK FORCE

**A.** The Contractor agrees to institute and maintain a program for achieving the objective of a drug-free work force. MDMR and the Engineer will not be responsible for implementing, overseeing or enforcing the Contractor's drug-free work force program.

**B.** Contractor programs shall include the following, or appropriate alternatives:

**1.** Employee assistance programs emphasizing high level direction, education, counseling, rehabilitation, and coordination with available community resources;

**2.** Supervisory training to assist in identifying and addressing illegal drug use by Contractor employees;

**3.** Provision for self-referrals as well as supervisory referrals to treatment with maximum respect for individual confidentiality consistent with safety and security issues;

**4.** Provision for identifying illegal drug users, including testing on a controlled and carefully monitored basis. Employee drug testing programs shall be established taking account of the following:

**a.** The Contractor shall establish a program that provides for testing for the use of illegal drugs by employees in sensitive positions. The extent of and criteria for such testing shall be determined by the Contractor based on considerations that include the nature of the Work being performed under the Contract, the employee's duties, and efficient use of Contractor resources, and the risks to health, safety, or national security that could result from the failure of an employee adequately to discharge his or her position.

**b.** In addition, the Contractor may establish a program for employee drug testing—

1) When there is a reasonable suspicion that an employee uses illegal drugs;

2) When an employee has been involved in an accident or unsafe practice;

3) As part of or as a follow-up to counseling or rehabilitation for illegal drug use; or

4) As part of a voluntary employee drug testing program.

**c.** The Contractor may establish a program to test applicants for employment for illegal drug use.

**C.** Contractor shall adopt appropriate personnel procedures to deal with employees who are found to be using drugs illegally. Contractor shall not allow any employee to remain on

duty or perform in a sensitive position who is found to use illegal drugs until such times as the Contractor, in accordance with procedures established by the Contractor, determines that the employee may perform in such a position.

**D.** The provisions of this section pertaining to drug testing program shall not apply to the extent that they are inconsistent with state or local law.

## 8.0 NOTIFICATION OF OWNERSHIP CHANGES

**A.** Contractor shall make the following notifications in writing:

**1.** When Contractor becomes aware that a change in its ownership has occurred, or is certain to occur, that could result in changes in the valuation of its capitalized assets in the accounting records, Contractor shall notify MDMR within 30 days.

**2.** Contractor shall also notify MDMR within 30 days whenever changes to asset valuations or any other cost changes have occurred or are certain to occur as a result of a change in ownership.

**3.** Contractor shall:

**a.** Maintain current, accurate, and complete inventory records of assets and their costs;

**b.** Provide MDMR or its designated representative ready access to records reasonably related to the performance of the Work performed hereunder upon request;

**c.** Ensure that all individual and grouped assets, their capitalized values, accumulated depreciation or amortization, and remaining useful lives are identified accurately before and after each of Contractor's ownership changes; and

**d.** Retain and continue to maintain depreciation and amortization schedules based on the asset records maintained before each Contractor ownership change.

## 9.0 EXAMINATION OF SITE, PLANS AND SPECIFICATIONS

It is the sole responsibility of Contractor to visit the site of the Work and to thoroughly examine the Contract Documents and to fully acquaint Contractor with the conditions to be encountered as to the character, quality and quantity of Work to be performed and materials to be furnished. Contractor shall fully understand the facilities, difficulties and restrictions that may be encountered in performing the Work.

By execution of the Contract, Contractor represents to MDMR that Contractor has made the necessary examination referred to in the preceding paragraph and can perform the Work for the Contract Price.

Contractor is advised that any report or other information (hereafter called “Additional Information”) given to Contractor by MDMR or Engineer or obtained by Contractor from the records of MDMR (except for the Contract Documents) is not a part of the Contract unless

specifically referenced to be used in conjunction with the Contract and is given solely for the convenience of Contractor for whatever use Contractor may wish to make of it. It is expressly understood and agreed that MDMR assumes no responsibility whatsoever in respect to the sufficiency or accuracy of the Additional Information or of any interpretations made thereof by any person. Availability or use of such Additional Information shall not be a waiver of Contractor's duty to examine the site of the Work, and Contractor is cautioned to make such independent investigation as Contractor deems necessary to satisfy Contractor as to the conditions to be encountered in the performance of the Work, including but not limited to: (1) conditions bearing upon transportation, disposal, handling and storage of materials; (2) the availability of labor, water, electric power and roads; (3) uncertainties of weather, tides or similar physical conditions at the site; (4) the conformation and conditions of the ground; and (5) other site conditions that may affect the Work performance.

## 10.0 INTERPRETATION OF PLANS AND SPECIFICATIONS

Should it appear that the Work to be done, or any matter relative thereto, is not sufficiently detailed or explained in the Contract Documents, Contractor shall apply in writing to the Engineer for such further explanations as may be necessary for Contractor to accomplish the Work, and Contractor shall conform to such explanation or interpretation of the Contract by Engineer so far as may be consistent with the intent of the Contract Documents. In the event of doubt or question relative to the true meaning of the Contract Documents as explained or interpreted by the Engineer, reference shall be made to MDMR, whose decision thereof shall be final.

In the event there is a discrepancy between the Specifications and the Plans or Drawings, the Specifications take precedence over the Drawings. In the event of any discrepancy between any Plans or Drawing and the figures written thereon, the figures shall be taken as correct.

## 11.0 INSPECTION

MDMR and Engineer or its designee shall at all times have access to the Work during construction and shall be furnished with every reasonable facility for obtaining full knowledge respecting the progress, workmanship and character of materials used and employed in the Work.

Whenever Contractor varies the period during which Work is carried on each day, Contractor shall give due notice to and obtain approval from MDMR and Engineer so that proper inspection may be provided. Any Work done in the absence of Engineer or Engineer's designee will be subject to rejection.

The inspection of the Work shall not relieve Contractor of any of Contractor's obligations to fulfill the Contract as prescribed. Defective Work shall be made good, and unsuitable materials may be rejected, notwithstanding the fact that such defective Work and unsuitable materials have been previously overlooked by Engineer in inspection and accepted for payment.

## 12.0 PUBLIC CONVENIENCE AND SAFETY

Contractor shall so conduct its operations and Work as to cause the least possible obstruction and inconvenience to public traffic.

Contractor shall furnish, erect, and maintain such fences, barriers, lights, warning and directional signs as deemed necessary by Engineer to give adequate warning to the public at all times of the construction and of any dangerous conditions to be encountered as a result thereof, and Contractor shall also erect and maintain such signs as may be furnished by MDMR.

All equipment shall be fully equipped with marine safety equipment as required by applicable state or federal law. Contractor shall have a program in place for inspecting and documenting the condition of equipment used on the Project and shall certify that the equipment is in compliance with applicable Occupational Safety and Health Administration (OSHA) and United States Coast Guard inspection requirements. A copy of such certification shall be submitted to MDMR prior to mobilization.

## 13.0 REMOVAL OF DEFECTIVE AND UNAUTHORIZED WORK

All work which is defective in its construction or deficient in any way of the requirements of the Contract, or work done by Contractor that is considered by MDMR to create a condition that threatens the health, safety, or welfare of the citizens and/or employees of the State of Mississippi or MDMR, shall be remedied, or removed and replaced by Contractor in an acceptable manner, and no compensation will be allowed for such correction.

Any Work done beyond the Plans or Specifications, or established by Engineer, or any extra Work done without the written authority of MDMR, will be considered as unauthorized and Contractor will not be compensated. Furthermore, any material that is deposited in places not designated or approved by the Engineer or MDMR may be required to be removed, and the Contractor will be required to deposit such misplaced material where directed at its expense. Additional clean-up and environmental damage mitigation requirements may be directed by MDMR. Such efforts will be entirely at the expense of the Contractor and any fines or penalties will be the responsibility of the Contractor.

Upon failure on the part of Contractor to comply forthwith with any order of MDMR or Engineer made under the provisions of this Section or Sections 3 or 21, MDMR shall have authority to cause the defective work to be remedied, or removed and replaced, and unauthorized work to be removed, and to deduct the costs thereof from any moneys due or to become due the Contractor.

## 14.0 CONTRACTOR'S RESPONSIBILITY FOR WORK

Until written final acceptance of the Work by MDMR, Contractor shall use all commercially reasonable means to secure and protect the Work from injury, loss or damage to all or any part thereof by an Act of God (including fire, flood, or hurricane) or from any other cause, whether arising from the execution of the Work, mobilization and demobilization or otherwise. Contractor shall rebuild, repair, restore and make good all damage to the Work or any portion thereof occasioned by Contractor's failure to use all commercially reasonable means to secure and protect the Work before final acceptance of the whole Work by MDMR and shall bear the entire expense of such rebuilding, repair or restoration of the Work if the Contractor fails to employ such means.

## 15.0 RESPONSIBILITY FOR DAMAGE

During the progress of the Work or any time before final acceptance, MDMR and Engineer shall not be liable to Contractor for any loss or damage to the Work or any part thereof, or to any material or equipment used or to be used in performing the Work, or for injury or damage to any person (including workers) or damage to property from any cause.

Until Final Acceptance by MDMR, protection of the Work and materials and equipment used thereon shall be the sole responsibility of Contractor.

## 16.0 OWNERSHIP OF DOCUMENTS AND WORK PRODUCTS

MDMR shall own all documents, files, reports, work papers and working documentation, electronic or otherwise, created in connection with the Contract, except for Contractor's internal administrative and quality assurance files and internal documents. Contractor shall deliver such documents and work papers to MDMR upon termination or completion of the Contract. The foregoing notwithstanding, Contractor shall be entitled to retain a set of such work papers for its files. Contractor shall be entitled to use such work papers only after receiving written permission from MDMR and subject to any copyright protections.

Except as needed to perform hereunder, the Contractor is prohibited from use of the above described information and/or materials without the express written approval of MDMR.

## 17.0 COPYRIGHTS

Contractor agrees that MDMR shall determine the disposition of the title to and the rights under any copyright by Contractor or employees on copyrightable material first produced or composed under this Contract. Further, Contractor hereby grants to MDMR a royalty-free, nonexclusive, irrevocable license to reproduce, translate, publish, use and dispose of, and to authorize others to do so, all copyrighted (or copyrightable) work not first produced or composed by Contractor in the performance of this Contract but which is incorporated in the material furnished under the Contract. This grant is provided that such license shall be only to the extent Contractor now has, or prior to the completion of full final settlements of agreement may acquire, the right to grant such license without becoming liable to pay compensation to others solely because of such grant.

## 18.0 RECORD RETENTION AND ACCESS TO RECORDS

Provided Contractor is given reasonable advance written notice and such inspection is made during normal business hours of Contractor, the State or any duly authorized representatives shall have unimpeded, prompt access to any of Contractor's books, documents, papers, and/or records which are maintained or produced as a result of the Project for the purpose of making audits, examinations, excerpts, and transcriptions. All records related to this Contract shall be retained by Contractor for five (5) years after final payment is made under this Contract and all pending matters are closed, or as required by federal or state law or regulations, whichever period is longer. However, if any audit, litigation or other action arising out of or related in any way to this Project is commenced before the end of the five (5) year period, the records shall be retained for one (1) year after all issues arising out of the action are finally resolved or until the end of the five (5) year period, whichever is later.

## 19.0 RIGHT TO AUDIT

Contractor shall maintain such financial records and other records as may be prescribed by MDMR or by applicable federal and state laws, rules, and regulations. Contractor shall retain these records for the period required in Section 18.0 above. These records shall be made available during the term of the Contract and the subsequent required retention period for examination, transcription, and audit by the MDMR and/or the Mississippi State Auditor's Office, their designees, or other authorized bodies.

## 20.0 THIRD PARTY ACTION NOTIFICATION

Contractor shall give MDMR immediate notice in writing of any action or suit filed, and prompt notice of any claim made against Contractor by any entity that may result in litigation related in any way to the Contract.

## 21.0 ORDERS OF ENGINEER

Whenever it is desirable by the Engineer and MDMR to give Contractor directions concerning the Work, orders will be given in writing to Contractor by delivery to Contractor's representative, or in the representative's absence, to Contractor's on-site superintendent or foreman in charge of the particular Work in reference to which the order is given, and such written orders shall be binding on Contractor and Contractor shall comply therewith.

Any provision of the Contract notwithstanding, all orders, directions or interpretations of the Engineer and MDMR to Contractor shall be in writing and shall be given to Contractor promptly after requested by Contractor.

Contractor shall not be bound to follow any orders, directions or interpretations of Engineer that are not in writing. MDMR shall not be liable to Contractor for Work performed by Contractor in

reliance on verbal orders of Engineer and neither shall such reliance relieve Contractor from the responsibilities of Contractor set forth in the Contract.

If Contractor believes that the order issued by the Engineer entitles Contractor to a change in either the Contract Price or the Contract Time, or both, Contractor shall give Engineer and MDMR written notice of a request for a change order within two (2) days after receipt of the order by the Engineer. The written request shall state the requested change in Contract Price, or extension of the Contract Time, and shall detail the basis for the request. Upon such a request, Contractor shall not be required to carry out the order of the Engineer pending the execution of a Change Order unless Contractor is otherwise directed in writing. If Contractor has requested a Change Order and is ordered to proceed with the Work before a Change Order is executed, such proceeding with the Work shall be without prejudice to the Contractor's right, if any, to request equitable adjustment or an extension of time.

## 22.0 CHANGE ORDERS

**A.** **Generally**. MDMR may order changes in the services consisting of additions, deletions, or other revisions within the general scope of the Contract. No claims may be made by Contractor that the scope of the Project or of Contractor's services has been changed, requiring changes to the amount of compensation to Contractor or other adjustments to the Contract, unless such changes or adjustments have been made by written amendment to the Contract signed by MDMR and Contractor. If Contractor believes that any particular work is not within the scope of the Project, is a material change, or will otherwise require more compensation to Contractor, Contractor must immediately notify MDMR in writing of this belief. If MDMR believes that the particular work is within the scope of the Contract as written, Contractor will be ordered to and shall continue with the Work as changed and at the cost stated for the services within the Contract.

**B.** **Procedures.** The parties shall initiate a Change Order as follows:

**1.** Proposed by MDMR/Engineer.

MDMR or Engineer may initiate changes by submitting a proposed Change Order to Contractor. The request will include:

**a.** Detailed description of the change, products, and location of the change in the Project;

**b.** Supplementary or revised Drawings and Specifications;

**c.** The projected time span for making the change and a specific statement as to whether overtime work is, or is not authorized;

**d.** A specific period of time during which the requested price will be considered valid; and

**e.** Such request is for information only, and is not an instruction to execute the changes or to stop Work in progress.

**2.** Proposed by Contractor.

Contractor may initiate changes by submitting a written notice to MDMR's Engineer, or directing to MDMR in the absence of a designated Engineer, containing:

**a.** Description of the proposed changes;

**b.** Statement of the reason for making the changes;

**c.** Statement of the effect on the Contract Sum and the Contract Time;

**d.** Statement of the effect on the work of separate contractors; and

**e.** Documentation supporting any change in Contract Sum or Contract Time, as appropriate.

**C. <u>Documentation and information supporting Change Order.</u>** The Contractor shall support each quotation for a lump-sum proposal, and for each unit price which has not previously been established, with sufficient substantiating data to allow MDMR or its Engineer to evaluate the quotation.

The Contractor will provide additional data to support time and cost computations:

**1.** Labor required for Contractor and sub-contractors;

**2.** Equipment required by Contractor and sub-contractors;

**3.** Products and materials required by Contractor and sub-contractors, including the recommended sources of purchase and unit cost and the quantities required;

**4.** Overhead (inclusive of insurance, bonds and taxes) and profit on labor by the Contractor and sub-contractors;

**5.** Overhead (inclusive of insurance, bonds and taxes) and profit on equipment by the Contractor and sub-contractors;

**6.** Credit for Work deleted from Contract, similarly documented; and

**7.** Justification for any change in Contract Time.

**D. <u>Form of Change Order.</u>**

**1.** The party initiating the request for a Change Order shall prepare the request on a form provided by MDMR.

**2.** A Change Order will describe changes in the Work, both additions and deletions, with attachments of revised Contract Documents to define details of the change.

3. A Change Order will provide an accounting of the adjustment in the Contract Sum and in the Contract Time.
4. MDMR and its Engineer, if designated for the Project, will sign and date the Change Order as authorization for the Contractor to proceed with the changes.
5. Contractor will sign and date the Change Order to indicate agreement with the terms therein.
6. Changes in price will be based on:
   a. Unit and lump sum prices already established in the Bid Form;
   b. Re-negotiated unit and lump sum prices established in the Bid Form;
   c. Negotiated unit prices for items not previously established in the Bid Form; or
   d. Negotiated lump sum prices for items not previously established in the Bid Form.
7. For negotiated unit or lump sum prices for items not previously established in the Bid Form, the total markup for profit and overhead for the Contractor, including all sub-contractors and/or vendors shall not exceed fifteen percent (15%).
8. Changes in Contract Time will be justified based on the Extension of Contract Time provision below.

**E. <u>Final Summary Change Order.</u>**

1. At the conclusion of the Project, the Engineer will perform a final quantity estimate of all unit price items and submit final quantities to the Contractor for review and verification.
2. After mutual acceptance of final quantities, the Engineer will prepare a summary Change Order that reflects all actual installed and accepted quantities.
3. MDMR and Contractor will sign and date the Final Summary Change Order to indicate their agreement with the terms therein.

**F. <u>Work Order Directive.</u>**

A Work Order Directive is a written order, instructions, or interpretations, signed by Engineer making minor changes in the Work not involving a change in Contract Sum or Contract Time.

## 23.0 EXTENSION OF CONTRACT TIME

**A. <u>Time Extension</u>**

1. The time within which to complete the Contract may be extended by MDMR if any of the following two (2) requirements are met:
   a. The delay is the result of documented causes beyond the control of Contractor or its Subcontractors or suppliers such as: acts of God; acts of the public enemy; acts of the State and any other governmental entity in its sovereign or contractual capacity; fires; floods; epidemics; quarantine restrictions; strikes or other labor disputes; freight embargoes; or unusually severe weather; or
   b. Negotiated additional time for new work activities not included in the original Contract.
2. In the circumstances described in Section 23(A)(1)(a), Contractor shall notify the Engineer in writing within ten (10) days from the beginning of any such delay period of the cause of the delay and request an extension of the time within which to complete the Contract by reason of the delay and specify the length of such requested extension in accordance with the Change Order provisions above.
3. MDMR or its Engineer, upon investigation, may grant an increase in the Contract Time in accordance with the Change Order provisions above.
4. No claims for increased costs, charges, expenses or damages of any kind shall be made by the Contractor against the Owner for any delays or hindrances from any cause whatsoever; provided that the Owner, in the Owner's discretion, may compensate the Contractor for any said delays by extending the time for completion of the Work as specified in the Contract. (No Damages for Delay)

## 24.0 MODIFICATION OR AMENDMENT

Modification, changes or amendments to the Contract may be made upon mutual agreement of the parties hereto. However, any change, supplement, modification or amendment of any term, provision or condition of the Contract must be in writing and signed by both parties hereto.

## 25.0 RELEASE PRIOR TO FINAL PAYMENT

Upon satisfactory completion of the Work performed under the Contract, as a condition before final payment under the Contract or as a termination settlement under the Contract, Contractor shall execute and deliver to MDMR a release of all claims against MDMR arising under, or by virtue of, the Contract by completing Appendix B. Unless otherwise provided in the Contract, by state law or otherwise expressly agreed to by the parties in the Contract, final payment under the Contract or settlement upon termination of the Contract shall not constitute waiver of MDMR's claims against Contractor or its sureties under the Contract or applicable performance and payment bonds.

## 26.0 CONFLICT OF INTEREST

Contractor shall immediately notify MDMR in writing of any interests (financial, contractual, organizational, or otherwise) relating to the services to be performed under this Contract that would create any actual or potential conflict of interest (or apparent conflicts of interest) (including conflicts of interest for immediate family members: spouses, parents, children) with respect to MDMR or the Project that would impinge on Contractor's ability to render impartial, technically sound, and objective assistance or advice or result in it being given an unfair competitive advantage. In this section, the term "potential conflict" means reasonably foreseeable conflict of interest. Contractor further certifies that it has and will continue to exercise due diligence in identifying and removing or mitigating, to MDMR's satisfaction, such conflict of interest (or apparent conflict of interest). If such conflict cannot be resolved to MDMR's satisfaction, MDMR reserves the right to terminate this Contract per the Termination for Convenience section of this Contract.

## 27.0 DEBARMENT AND SUSPENSTION

Contractor certifies to the best of its knowledge and belief that it, its corporate officers, principal owners, managers, auditors and others in a position of administering governmental funds:

**A.** Are not presently debarred, suspended, proposed for debarment, declared ineligible, or voluntarily excluded from covered transaction by any federal department or agency or any political subdivision or agency of the State of Mississippi;

**B.** Have not, within a three year period preceding this Contract, been convicted of or had a civil judgment rendered against them for commission of fraud or a criminal offense in connection with obtaining, attempting to obtain, or performing a public (federal, state, or local) transaction or Contract under a public transaction;

**C.** Have not, within a three year period preceding this Contract, been convicted of or had a civil judgment rendered against them for a violation of federal or state antitrust statutes or commission of embezzlement, theft, forgery, bribery, falsification or destruction of records, making false statements, or receiving stolen property;

**D.** Are not presently indicted for or otherwise criminally or civilly charged by a governmental entity (federal, state or local) with commission of any of these offenses enumerated in subparagraphs B. and C. of this certification; and

**E.** Have not, within a three-year period preceding this Contract, had one or more public transactions (federal, state, or local) terminated for cause or default.

## 28.0 REPRESENTATION REGARDING CONTINGENT FEES

Contractor represents that it has not retained a person to solicit or secure a State of Mississippi contract upon an agreement or understanding for a commission, percentage, brokerage, or contingent fee, except as disclosed in the Contractor's bid.

## 29.0 REPRESENTATION REGARDING GRATUITIES

Contractor represents that it has not violated, is not violating, and promises that it will not violate the prohibition against gratuities.

## 30.0 TAX BONDS

A Tax Bond securing the prompt payment of taxes, licenses, assignments, contributions, damages, penalties, and interest thereon incurred in connection with the performance of the Contract shall also be provided and approved by MDMR prior to commencing Work under the Contract.

Attorneys-in-fact who sign Payment Bonds, Performance Bonds, and Tax Bonds must file with each Bond a certified and effective dated copy of their power of attorney.

## 31.0 INSURANCE REQUIREMENTS

Contractor shall maintain during the period of performance of the Contract the following liability insurance coverage and shall require its subcontractors to maintain said coverage, related to the work of the Contractor and in connection with the Contract.

**A.** Workers' Compensation and Employer's Liability Insurance. This insurance shall protect Contractor against all claims under applicable state workers' compensation laws. Contractor shall also be protected against claims for injury, disease, or death of employees, which, for any reason, may not fall within the provisions of a workers' compensation law. The liability limits shall not be less than the required statutory limits for workers' compensation and employer's liability limits in the amount of One Million and 00/100 Dollars ($1,000,000.00). Contractor shall supply MDMR endorsements from its carriers evidencing waiver of subrogation in favor of MDMR.

**B.** Longshore and Harbor Workers' Compensation Insurance. This insurance shall protect Contractor against all claims under the Jones Act, Death on the High Seas Act, Outer Continental Shelf Lands Act and Maritime Laws in which case minimum limits of Employers' Liability Insurance will be at least $1,000,000.00 per occurrence, including transportation, wages, maintenance and cure.

**C.** Comprehensive General Liability Insurance. This insurance shall include bodily injury, property damage, contractual and other standard coverage contained in comprehensive general liability insurance, in an amount of not less than One Million and 00/100 Dollars ($1,000,000.00) per occurrence and Two Million and 00/100 Dollars ($2,000,000.00) aggregate.

**D.** Contractors Pollution Liability Insurance. This insurance shall protect Contractor for claims for bodily injury and property damage stemming from pollution caused by the Contractor's work or equipment. This insurance shall also cover remediation costs stemming from pollution incidents resulting from the Contractor's operations and Work under this Contract. This insurance shall have minimum limits of at least $1,000,000.00 per occurrence and $2,000,000.00 in the aggregate.

**E.** Auto Liability Insurance. This insurance shall be in the amount of not less than One Million and 00/100 Dollars ($1,000,000.00) Combined Single Limit to protect it from any and all claims arising from the use of the following: (1) Contractor's own automobiles and trucks; (2) hired and non-owned automobiles and trucks; and (3) automobiles and trucks owned by CONTRACTORS and SUBCOONTRACTORS. The aforementioned is to cover use of automobiles and trucks on and off the site of the Project.

**F.** MDMR, its Commissioners, officers, employees, agents and representatives, and the State of Mississippi shall be named as additional insureds on all liability insurance policies. The Contractor shall provide that the insureds under all insurance waive subrogation against the State of Mississippi and the said agency and subdivisions thereof. The Contractor's respective policies shall provide primary coverage before any applicable policy otherwise covering MDMR, and any insurance covering MDMR shall be excess coverage over the Contractor's coverage. Endorsements so stating shall be provided to MDMR by the Contractor. The policies shall also provide for all additional insureds to be provided with a minimum 30-day written notice prior to a cancellation or modification of each respective policy. While Contractor shall provide MDMR with endorsements as set forth in this Section, the failure to do so, or the failure of the endorsements or insurance provided to conform to the Contract, does not constitute waiver or estoppels as to MDMR of their respective legal and equitable rights, including but not limited to the right to enforce the terms of the Contract. These contractual insurance provisions are intended to be, and shall be interpreted to be, separate and independent contractual obligations from the contractual provisions addressing the indemnity of MDMR by the Contractor. Upon execution of the Contract, the Contractor shall promptly furnish MDMR with certificates of insurance and endorsements showing the Contractor's compliance with the insurance provisions of this Section.

## 32.0 INDEMNIFICATION

To the fullest extent allowed by law, Contractor hereby agrees to defend, indemnify and hold harmless MDMR, its Commissioners, Board Members, officers, employees, agents, and representatives, and the State of Mississippi from and/or against all claims, demands, liabilities, suits, actions, damages, losses, and costs of every kind and nature whatsoever, including, without limitation, court costs, investigative fees and expenses, and attorneys' fees, arising out of or caused

by the Contractor and/or its partners, principals, agents, employees and/or Subcontractor's in the performance of or failure to perform this Agreement. In MDMR's sole discretion, Contractor may be allowed to control the defense of any such claim, suit, etc. In the event Contractor defends said claim, suit, etc., Contractor shall use legal counsel acceptable to MDMR; Contractor shall be solely responsible for all costs and/or expenses associated with such defense, and MDMR shall be entitled to participate in said defense. Contractor shall not settle any claim, suit, etc., without MDMR's concurrence, which MDMR shall not unreasonably withhold. This indemnity obligation is intended to be, and shall be interpreted to be, a separate and independent contractual obligation from the contractual provisions addressing the requirements and placement of insurance, including, but not limited to, insurance covering MDMR.

## 33.0 NO LIMITATION OF LIABILITY

Nothing in this Contract shall be interpreted as excluding or limiting any tort liability of Contractor for harm caused by the intentional or reckless conduct of Contractor or for damages incurred through the negligent performance of duties by Contractor or the delivery of products that are defective due to negligent construction.

## 34.0 RECOVERY OF MONEY

Whenever, under the Contract, any sum of money shall be recoverable from or payable by Contractor to MDMR, the same amount may be deducted from any sum due to Contractor under the Contract or under any other Contract between Contractor and MDMR. The rights of MDMR are in addition and without prejudice to any other right MDMR may have to claim the amount of any loss or damage suffered by MDMR on account of the acts or omissions of Contractor.

## 35.0 SUBCONTRACTS

Contractor acknowledges that it was selected by MDMR to perform the services required hereunder based, in part, upon Contractor's special skills and expertise. Contractor shall not assign, subcontract, or otherwise transfer the Contract, in whole or in part, without the prior written consent of MDMR, which MDMR may, in its sole discretion, approve or deny without reason. Contractor must notify MDMR in writing and submit a Request to Subcontract form using the form provided by MDMR (Attachment G) prior to assigning or subcontracting any portion of the Contract; and MDMR, in its sole reasonable discretion, shall have the right to reject the letting of any such assignment or subcontract. Any attempted assignment or transfer of its obligations without such consent shall be null and void. No such approval by MDMR of any subcontract shall be deemed in any way to provide for the incurrence of any obligation of MDMR in addition to the total fixed price agreed upon in the Contract. Subcontracts shall be subject to the terms and conditions of the Contract and to any conditions of approval that MDMR may deem necessary.

## 36.0 ASSIGNMENT

Contractor shall not assign or otherwise transfer the obligation incurred on its part pursuant to the terms of the Contract without the prior written consent of MDMR. Any attempted assignment or transfer of its obligations without such consent shall be null and void. All obligations and duties of either party under the Contract shall be binding on all successors in interest or assigns of such party.

## 37.0 CONFIDENTIAL INFORMATION

A. **Information Designated by Contractor as Confidential.** Any disclosure of those materials, documents, data and other information, which Contractor has designated in writing as proprietary and confidential shall be subject to the provisions of Miss. Code Ann. §§ 25-61-9 and 79-23-1. As provided in this Contract, the personal or professional services to be provided, the price to be paid, and the term of the Contract shall not be deemed to be a trade secret or confidential commercial or financial information. Any liability resulting from the wrongful disclosure of Confidential Information on the part of Contractor or its subcontractor shall rest with CONTRACTOR. Disclosure of any Confidential Information by Contractor or its subcontractor without the express written approval of MDMR shall result in the immediate termination of this Contract.

B. **Public Records.** Notwithstanding any provision to the contrary contained herein, all Parties recognize that MDMR is a public agency of the State of Mississippi and is subject to the Mississippi Public Records Act. Miss. Code Ann. §§ 25-61-1 et seq. If a public records request is made for any information provided to MDMR pursuant to this Contract and designated by the Contractor in writing as trade secrets or other proprietary confidential information, MDMR shall follow the provisions of Miss. Code Ann. §§ 25-61-9 and 79-23-1 before disclosing such information. MDMR shall not be liable to Contractor for disclosure of information required by court order or required by law.

C. **Disclosure of Confidential Information.** In the event that either party to this Contract receives notice that a third party requests divulgence of Confidential Information or otherwise protected information and/or has served upon it a subpoena or other validly issued administrative or judicial process ordering divulgence of Confidential Information or otherwise protected information, that party shall promptly inform the other party and thereafter respond in conformity with such subpoena to the extent mandated by law. This section shall survive the termination or completion of this Contract. The parties agree that this section is subject to and superseded by Mississippi Code Annotated §§ 25-61-1 et seq.

D. **Exceptions to Confidential Information.** Contractor and the State shall not be obligated to treat as confidential and proprietary any information disclosed by the other party **("Disclosing Party")** which is:

1. Rightfully known to the recipient prior to negotiations leading to this Contract, other than information obtained in confidence under prior engagements;
2. Generally known or easily ascertainable by nonparties to this Contract;
3. Released by the Disclosing Party to any other person, firm, or entity (including governmental agencies or bureaus) without restriction;
4. Independently developed by the recipient without any reliance on confidential information;
5. Part or later becomes part of the public domain or may be lawfully obtained by the State or Contractor from any nonparty; or
6. Disclosed with the Disclosing Party's prior written consent.

## 38.0 TEMPORARY SUPENSION OF WORK

MDMR shall have the authority to suspend the Work wholly or in part, for such period as it may deem necessary due to: (1) unsuitable weather; (2) such other conditions as are considered unfavorable for the suitable prosecution of the Work. Further, MDMR, Engineer, and Army Corps of Engineers (COE), may temporarily suspend work for failure on part of Contractor or any Subcontractor to carry out orders given by Engineer pursuant to the Contract or to perform any provisions of the Work in the manner prescribed by the Contract and/or permits. Any such suspension ordered by MDMR shall be within its sole discretion. Contractor shall immediately cease Work upon such order of MDMR's Executive Director or representative and shall not resume the Work until ordered in writing by MDMR. Contractor shall not be entitled to any increase in the Contract Price and waives any claim for damages as a result of any such suspension of Work.

## 39.0 STOP WORK ORDER

A. **Order to Stop Work.** The Chief Procurement Officer of the State of Mississippi, may, by written order to the Contractor at any time, and without notice to any surety, require the Contractor to stop all or any part of the work called for by this contract. This order shall be for a specified period not exceeding 90 days after the order is delivered to the Contractor, unless the parties agree to any further period. Any such order shall be identified specifically as a stop work order issued pursuant to this clause. Upon receipt of such an order, the Contractor shall forthwith comply with its terms and take all reasonable steps to minimize the occurrence of costs allocable to the work covered by the order during the period of work stoppage. Before the stop work order expires, or within any further period to which the parties shall have agreed, the Chief Procurement Officer shall either:

1. Cancel the stop work order; or

2. Terminate the work covered by such order as provided in the 'Termination for Default Clause' or the 'Termination for Convenience Clause' of this contract.

**B. Cancellation or Expiration of the Order.** If a stop work order issued under this clause is cancelled at any time during the period specified in the order, or if the period of the order or any extension thereof expires, the Contractor shall have the right to resume work. An appropriate adjustment shall be made in the delivery schedule or Contractor price, or both, and the contract shall be modified in writing accordingly, if:

1. the stop work order results in an increase in the time required for, the performance of any part of this contract; or,
2. the stop work order results in an increase in the Contractor's cost properly allocable to the performance of any part of this contract; and,
3. the Contractor asserts a claim for such an adjustment within 30 days after the end of the period of work stoppage; provided that, if the Chief Procurement Officer decides that the facts justify such action, any such claim asserted may be received and acted upon at any time prior to final payment under this contract.

## 40.0 TERMINATION

The Contract may be terminated as follows:

**A. Termination Upon Bankruptcy.** The Contract may be terminated in whole or in part by MDMR upon written notice to Contractor, if Contractor should become the subject of bankruptcy or receivership proceedings, whether voluntary or involuntary, or upon the execution by Contractor of an assignment for the benefit of its creditors. In the event of such termination, Contractor (or Bonding Company) shall be paid an amount for satisfactory work actually performed pursuant to the Contract, but in no case shall said compensation exceed the total Contract Price.

**B. Termination for Convenience.** MDMR may terminate the Contract, in whole or in part, for any reason after giving written notice to Contractor of such termination and specifying the effective date thereof, at least ten (10) days before the effective date of such termination. Contractor shall be paid an amount for satisfactory work actually performed in connection with the Contract, but in no case shall said compensation exceed the total Contract price.

Upon receiving notice of termination, Contractor shall incur no further obligations in connection with the terminated work, and on the date set in the notice of termination Contractor will stop work to the extent specified. Contractor shall also terminate outstanding orders and subcontracts as they relate to the terminated work. Contractor shall settle the liabilities and claims arising out of the termination of subcontracts and orders

connected with the terminated work. MDMR may direct Contractor to assign Contractor's right, title, and interest under terminated orders or subcontracts to MDMR. Contractor must still complete the work not terminated by the notice of termination and may incur obligations as are necessary to do so.

**C. Termination for Cause:**

**1.** Default. If Contractor refuses or fails to perform any of the provisions of this Contract with such diligence as will ensure its completion within the time specified in this Contract or any extension thereof or otherwise fails to timely satisfy the Contract provisions or commits any other substantial breach of this Contract, MDMR may notify Contractor in writing of the delay or nonperformance. If delay or nonperformance is not cured in ten (10) days or any longer time specified in writing by the MDMR officer or representative, MDMR may terminate Contractor's right to proceed with the Contract or such part of the Contract as to which there has been delay or a failure to properly perform. In the event of termination in whole or in part, the procurement officer may procure similar supplies or services in a manner and upon terms deemed appropriate by MDMR. Contractor shall continue performance of the Contract to the extent it is not terminated and shall be liable to MDMR for excess costs incurred in procuring similar goods or services.

**2.** Contractor's Duties. Notwithstanding termination of the Contract and subject to any directions from MDMR, Contractor shall take timely, reasonable, and necessary action to protect and preserve property in the possession of Contractor in which the State has an interest.

**3.** Compensation. Payment for completed services delivered and accepted by the State shall be at the Contract Price. The State may withhold from amounts due Contractor such sums as MDMR deems to be necessary to protect the State against loss because of outstanding liens or claims of former lien holders and to reimburse the State for the excess costs incurred in procuring similar goods and services.

**4.** Excuse for Nonperformance or Delayed Performance. Except with respect to defaults of subcontractors, Contractor shall not be in default by reason of any failure in performance of this Contract in accordance with its terms (including any failure by Contractor to make progress in the prosecution of the work hereunder which endangers such performance) if Contractor has notified MDMR within 10 days after the cause of the delay and the failure arises out of causes such as: acts of God; acts of the public enemy; acts of the State and any other governmental entity in its sovereign or contractual capacity; fires; floods; epidemics; quarantine restrictions; strikes or other labor disputes; freight embargoes; or unusually severe weather. If the failure to perform is caused by the failure of a subcontractor to perform or to make progress and if such

failure arises out of causes similar to those set forth above, Contractor shall not be deemed to be in default, unless the services to be furnished by the subcontractor were reasonably obtainable from other sources in sufficient time to permit Contractor to meet the Contract requirements. Upon request of Contractor, MDMR shall ascertain the facts and extent of such failure. If MDMR determines that any failure to perform was occasioned by any one or more of the excusable causes and that, but for the excusable cause, Contractor's progress and performance would have met the terms of the Contract, the delivery schedule may be revised accordingly, subject to the rights of MDMR under the section entitled "Termination for Convenience." (As used in this paragraph of this section, the term "subcontractor" means subcontractor at any tier.)

**5.** Erroneous Termination for Default. If, after notice of termination of Contractor's right to proceed under the provisions of this section, MDMR determines for any reason that the Contract was not in default under the provisions of this section or that the delay was excusable under the provisions of subparagraph 4. (Excuse for Nonperformance or Delayed Performance) of this section, the rights and obligations of the parties shall, if the Contract contains a clause providing for Termination for Convenience, be the same as if the notice of termination had been issued pursuant to such section.

Notwithstanding any of the foregoing provisions, Contractor shall not be relieved of liability to MDMR for damages sustained by MDMR by virtue of any breach of the Contract by Contractor, and MDMR may withhold any payments to Contractor for the purpose of set off until such time as the exact amount of damages due MDMR from Contractor are determined. MDMR may also pursue any remedy available to it in law or in equity.

## 41.0 USE AND POSSESSION PRIOR TO COMPLETION

**A.** MDMR shall have the right to take possession of or use any completed or partially completed part of the Work. Before taking possession of or using any Work, the MDMR or its designated Engineer shall furnish the Contractor a list of items of Work remaining to be performed or corrected on those portions of the Work that the MDMR intends to take possession of or use. However, failure of the MDMR or its Engineer to list any item of Work shall not relieve the Contractor of responsibility for complying with the terms of the Contract Documents. MDMR's possession or use shall not be deemed an acceptance of any Work under the Contract Documents.

**B.** While MDMR has such possession or use, the Contractor shall be relieved of the responsibility for the loss of or damage to the Work resulting from MDMR's possession or use. If prior possession or use by MDMR delays the progress of the Work or causes additional expense to the Contractor, an equitable adjustment shall be made in the Contract Price or the Contract Time pursuant to the Change Order provisions above.

## 42.0 ANTITRUST

By entering into this Contract, Contractor conveys, sells, assigns, and transfers to MDMR all rights, titles, and interest it may now have, or hereafter acquire, under the antitrust laws of the United States and the State that relate to the services purchased or acquired by MDMR under this Contract.

## 43.0 PROCUREMENT REGULATIONS

The Contract shall be governed by the applicable provisions of the Public Procurement Review Board Regulations.

## 44.0 E-VERIFICATION

If applicable, Contractor represents and warrants that it will ensure its compliance with the Mississippi Employment Protection Act of 2008 and will register and participate in the status verification system for all newly hired employees. Miss. Code Ann. §§ 71-11-1, *et seq*. The term "employee" as used herein means any person that is hired to perform work within the State. As used herein, "status verification system" means the Illegal Immigration Reform and Immigration Responsibility Act of 1996 that is operated by the United States Department of Homeland Security, also known as the E-Verify Program, or any other successor electronic verification system replacing the E-Verify Program. Contractor agrees to maintain records of such compliance. Upon request of the State of Mississippi and after approval of the Social Security Administration or Department of Homeland Security, when required, Contractor agrees to provide a copy of each such verification. Contractor further represents and warrants that any person assigned to perform services hereafter meets the employment eligibility requirements of all immigration laws. The breach of this Contract may subject Contractor to the following:

**A.** Termination of this Contract for services and ineligibility for any state or public Contract in Mississippi for up to three (3) years with notice of such cancellation/termination being made public;

**B.** The loss of any license, permit, certification or other document granted to Contractor by an agency, department or governmental entity for the right to do business in Mississippi for up to one (1) year; or

**C.** Both. In the event of such termination/cancellation, Contractor would also be liable for any additional costs incurred by the State due to Contract cancellation or loss of license or permit to do business in the State.

## 45.0 E-PAYMENT

Contractor agrees to accept all payments in United States currency via the State of Mississippi's electronic payment and remittance vehicle. MDMR agrees to make payment in accordance with

Mississippi law on "Timely Payments for Purchases by Public Bodies," Mississippi Code Annotated 31-7-301, et seq., which generally provides for payment of undisputed amounts by the agency within forty-five (45) days of receipt of invoice.

**46.0 PAYMODE**

Payments by state agencies using the Statewide Automated Accounting System (SAAS) shall be made and remittance information provided electronically as directed by the State. These payments shall be deposited into the bank account of the Contractor's choice. The State, may in its sole discretion, require the Contractor to submit invoices and supporting documentation electronically at any time during the term of this Agreement. Contractor understands and agrees that the State is exempt from the payment of taxes. All payments shall be in United States currency.

**47.0 TRANSPARENCY**

This Contract, including any accompanying exhibits, attachments, and appendices, is subject to the "Mississippi Public Records Act of 1983" and its exceptions. See Miss. Code Ann. §§ 25-61-1 *et seq.* and Miss. Code Ann. § 79-23-1. In addition, this Contract is subject to the provisions of the Mississippi Accountability and Transparency Act of 2008. Miss. Code Ann. §§ 27-104-151, *et seq*. Unless exempted from disclosure due to a court-issued protective order, a copy of this executed Contract is required to be posted to the Department of Finance and Administration's independent agency Contract website for public access at http://www.transparency.mississippi. Information identified by Contractor as trade secrets or other proprietary information, including confidential vendor information, or any other information which is required confidential by state or federal law or outside the applicable freedom of information statutes will be redacted. In the event the MDMR receives a public records request for documents containing information identified by the Contractor as trade secrets or proprietary information, the MDMR will notify the Contractor who will be given a reasonable time to obtain a court order protecting the information. See Mississippi Code Annotated § 25-61-9(1). The personal or professional services to be provided, the price to be paid, and the terms of this Contract shall not be deemed to be a trade secret or confidential commercial or financial information.

**48.0 WAIVER**

Failure by MDMR, at any time, to enforce the provisions of the Contract shall not be construed as a waiver of any such provisions. Such failure to enforce shall not affect the validity of the Contract or any part thereof or the right of MDMR to enforce any provision at any time in accordance with its terms.

**49.0 GOVERNING LAW**

The Contract shall be construed and governed in accordance with the laws of the State of Mississippi, without regard to its conflict of laws provisions and the laws of the United States of

America, and venue for the resolution of any dispute shall be brought in the appropriate state or federal court located in Harrison County, Mississippi.

## 50.0 COMPLIANCE WITH LAWS

Contractor understands that MDMR is an equal opportunity employer and therefore maintains a policy which prohibits unlawful discrimination based on race, color, creed, sex, age, national origin, physical handicap, disability, or any other consideration made unlawful by federal, state, or local laws. All such discrimination is unlawful and Contractor agrees during the term of the Contract that Contractor will strictly adhere to this policy in its employment practices and provision of work performed pursuant to the Contract. Contractor shall comply with, and all activities under this Agreement shall be subject to, all applicable federal, state, and local laws and regulations, as now existing and as may be amended or modified. Contractor shall immediately report in writing to MDMR any discrepancy or inconsistency in the Contract Documents that appear to violate or be contrary to the then existing applicable federal, state and local laws. Contractor shall ensure that any person assigned to perform services hereunder meets the employment eligibility requirements of the immigration and naturalization laws including but not limited to the Immigration Reform and Control Act of 1986.

## 51.0 REFERENCE TO STATUTES

Whenever reference is made to the provision of any statute or law in the Contract Documents, such reference applies to any amendment or change in such statute or law now existing, but to become operative sometime after the signing of the Contract.

## 52.0 CAPTIONS

The captions or headings in the Contract are for convenience only, and in no way define, limit or describe the scope or intent of any provision or section of the Contract.

## 53.0 SEVERABILITY

If any part of this Contract is declared to be invalid or unenforceable, such invalidity or unenforceability shall not affect any other provision of the agreement that can be given effect without the invalid or unenforceable provision, and to this end the provisions hereof are severable. In such event, the parties shall amend the agreement as necessary to reflect the original intent of the parties and to bring any invalid or unenforceable provisions in compliance with applicable law.

## 54.0 DISPUTES

Before pleading to any judicial system at any level, Contractor must exhaust all administrative remedies. A written complaint must first be sent to the Executive Director of MDMR. The decision of the Executive Director shall be reduced to writing and a copy thereof mailed or furnished to Contractor.

For any disputed claim over $100,000, and as a prerequisite to the claim proceeding through MDMR's administrative remedies and in court, a registered officer of the Contractor shall provide the following certification to MDMR upon filing the initial written complaint with the Executive Director:

"I certify that the claim is made in good faith; that the supporting data are accurate and complete to the best of my knowledge and belief; that the amount requested accurately reflects the contract adjustment for which the Contractor believes MDMR is liable; and that I am duly authorized to certify the claim on behalf of the Contractor."

## 55.0 ATTORNEY'S FEES AND EXPENSES

If MDMR incurs attorneys' fees, costs or expenses (including, without limitation, investigative fees and court costs) in order to enforce any of the terms, provisions or conditions of this Contract or because of the breach of this Contract by the Contractor, MDMR shall be entitled to recover its reasonable attorney's fees, costs and expenses from Contractor if MDMR is the prevailing party (whether by suit, negotiation or settlement).

# ATTACHMENT G

## Request to Subcontract

In accordance with the Anti-Assignment/Subcontracts Section of the below referenced Contract, we request approval to subcontract the following portion or duties under the Contract.

MDMR Contractor:_____

MDMR Contract Number:_____

Proposed Subcontractor's name and DUNS #:_____

Is the proposed subcontractor a certified MBE firm? Yes_____ No_____

Is the proposed subcontractor a certified WBE firm? Yes_____ No_____

Reason for subcontracting:_____

_____

Define tasks/work to be subcontracted:_____

_____

_____

Proposed subcontract amount: $_____

**REQUESTED BY:**

_____ _____
Contractor – Printed Name Title

_____ _____
Contractor - Signature Date

**APPROVAL:**

_____ _____
MDMR Executive Director – Signature Date

# ATTACHMENT H

## Miss. Code Ann. § 31-5-33

### § 31-5-33. Amount of retainage which may be withheld; exemptions

(1) In any contract for the construction, repair, alteration or demolition of any building, structure or facility awarded by the State of Mississippi, or any agency, unit or department of the State of Mississippi, or by any political subdivision thereof, which contract provides for progress payments in installments based upon an estimated percentage of completion with a percentage of the contract proceeds to be retained by the state agency, unit or department, or by the political subdivision or contractor pending completion of the contract, such retainage shall be five percent (5%), and the amount retained by the prime contractor from each payment due the subcontractor shall not exceed the percentage withheld by the state, or any agency, unit or department of the state, or by any political subdivision thereof, from the prime contractor. On any contract as described herein, of which the total amount is Two Hundred Fifty Thousand Dollars ($ 250,000.00) or greater, or on any contract with a subcontractor, regardless of amount, five percent (5%) shall be retained until the work is at least fifty percent (50%) complete, on schedule and satisfactory in the architect's and/or engineer's opinion, at which time fifty percent (50%) of the retainage held to date shall be returned to the prime contractor for distribution to the appropriate subcontractors and suppliers. Provided, however, that future retainage shall be withheld at the rate of two and one-half percent (2 1/2%).

(2) The provisions of this section shall not apply to contracts let by the Mississippi Transportation Commission for the construction, improvement or maintenance of roads and bridges.

**HISTORY: SOURCES:** Laws, 1979, ch. 454, § 1; Laws, 1984, ch. 406, § 1; Laws, 2002, ch. 519, § 2, eff from and after July 1, 2002.

## Miss. Code Ann. § 31-7-305

**§ 31-7-305. Recordkeeping and notice requirements; time for mailing check in payment of invoice; time for payment in event of dispute; interest penalties.**

(1) All public bodies of the state, including those which issue checks and those which file requisitions for payment with the State Fiscal Management Board, shall keep a record of the date of receipt of the invoice, dates of receipt, inspection and approval of the goods or services, date of issuing the check or date of filing the requisition for payment, as the case may be, and date of mailing or otherwise delivering the warrant or check in payment thereof. In the event that the State Fiscal Management Board mails or otherwise delivers the warrant directly to the claimant, pursuant to Section 7-7-35, Mississippi Code of 1972, the State Fiscal Management Board shall notify the public body of the date thereof. The provisions of this section are supplemental to the requirements of Sections 19-13-29, 21-39-7, 21-39-13 and 37-5-93, Mississippi Code of 1972.

(2) All public bodies that are authorized to issue checks in payment of goods and services and are not required to issue requisitions for payment to the State Fiscal Management Board shall mail or otherwise deliver such checks no later than forty-five (45) days after receipt of the invoice and receipt, inspection and approval of the goods or services; however, in the event of a bona fide dispute, the public body shall pay only the amount not disputed.

(3) If a warrant or check, as the case may be, in payment of an invoice is not mailed or otherwise delivered within forty-five (45) days after receipt of the invoice and receipt, inspection and approval of the goods and services, the public body shall be liable to the vendor, in addition to the amount of the invoice, for interest at a rate of one and one-half percent (1-1/2 %) per month or portion thereof on the unpaid balance from the expiration of such forty-five-day period until such time as the warrant or check is mailed or otherwise delivered to the vendor. The provisions of this paragraph shall apply only to undisputed amounts for which payment has been authorized. In the case of an error on the part of the vendor, the forty-five-day period shall begin to run upon receipt of a corrected invoice by the public body and upon compliance with the other provisions of this section. The various public bodies shall be responsible for initiating the penalty payments required by this subsection and shall use this subsection as authority to make such payments. Also, at the time of initiating such penalty payment, the public body shall specify in writing an explanation of the delay and shall attach such explanation to the requisition for payment of the penalty or to the file copy of the check issued by the public body, as the case may be.

(4) (a) In the event of a bona fide dispute as to an invoice, or any portion thereof, the dispute shall be settled within thirty (30) days after interest penalties could begin to be assessed, if it were not for the dispute.

(b) If a warrant or check, as the case may be, in payment of an invoice, subject to a prior dispute, is not mailed or otherwise delivered within thirty (30) days after settlement of the dispute, the public body shall be liable to the vendor, in addition to the amount of the invoice, for interest at

a rate of one and one-half percent (1-1/2 %) per month or portion thereof on the unpaid balance from the expiration of said thirty-day period until such time as the warrant or check is mailed or otherwise delivered to the vendor. At the time of initiating such penalty payment, the public body shall specify in writing an explanation of the delay and shall attach such explanation to the requisition for payment of the penalty or to the file copy of the check issued by the public body, as the case may be. The interest penalty prescribed in this paragraph shall be in lieu of the penalty provided in subsection (3).

# SECTION 00 52 15

# AGREEMENT

This Agreement (hereinafter "Agreement" or "Contract") is entered by and between the Mississippi Department of Marine Resources (hereinafter called "MDMR" or "Agency") and _____ (hereinafter called "Contractor").

MDMR and Contractor, in consideration of the mutual covenants hereinafter set forth, agree as follows:

## ARTICLE 1-WORK

Contractor shall complete all work as specified or indicated in the Contract Documents as defined in ARTICLE 7 below ("Work"). Contractor shall furnish all labor, materials, equipment, appliances, services, tools, bonds, insurance, taxes and other things necessary for the complete and timely performance of the Work. The Work is generally described as follows:

Coffee Creek Outfall Replacement includes the demolition and installation of a new cast-in-place concrete box culvert system including all associated excavation, dewatering and concrete foundations. Additionally, concrete stairs, concrete paving and the construction of a pavilion on top of the box culvert will also be required. Sand beach work will include the installation of sand volleyball courts & all associated equipment, other beach amenities along with the final grading and planting of sea grasses.

The major categories of Work include, but are not limited to, the following:

1. Surveying and Layout;
2. Demolition of existing precast wall panels to include separator beams and wooden pilings;
3. Form and place shallow and deep concrete foundations/slabs/ramps
4. Form and place a finished elevated concrete slab to serve as top of box culvert system;
5. Excavation, backfill and dewatering to accommodate all work;
6. Final grading and planting,

## ARTICLE 2-MDMR AND ENGINEER

This is an MDMR Project.

Covington Civil & Environmental, LLC (hereinafter called "Engineer") is to act as MDMR's representative, assumes all duties and responsibilities and has the rights and authority assigned to Engineer in accordance with the MDMR's Terms and Conditions, including Section 3 of same, in connection with the completion of the Work in accordance with the Contract Documents.

## ARTICLE 3-CONTRACT TIME AND LIQUIDATED DAMAGES

**3.01** The Contractor will commence and complete the construction of the Project within the period of performance defined in Section 3.02.

**3.02** The performance period for this Contract has been established at 180 calendar days from issuance of the Notice to Proceed ("Contract Time"). The Contract Time is inclusive of anticipated adverse weather days.

**3.03** Liquidated Damages. MDMR and Contractor recognize that time is of the essence for this Agreement and that MDMR may suffer financial loss if the Work is not completed within the time specified in Section 3.02 above, plus any extensions thereof allowed in accordance with the Extension of Contract Time provisions in the Standard Contract Terms and Conditions. The parties also recognize the delays, expense, and difficulties involved in proving the actual loss suffered by MDMR if the Work is not completed on time. Accordingly, instead of requiring any such proof, MDMR and Contractor agree that as liquidated damages for delay Contractor shall pay MDMR $1,500.00 for each day that expires after the time specified in Section 3.02, subject to any extensions granted.

## ARTICLE 4-COMPENSATION

The Contractor agrees to furnish all materials in place and to faithfully complete all said Work described by this Contract in good and workmanlike manner, strictly in accordance with said Contract Documents, Contract Drawings, and other requirements of the Agency, under the direct observation of and to the complete satisfaction of the Agency or its authorized representatives, and in accordance with the laws of the State of Mississippi, for which the MDMR hereby agrees to pay, and the Contractor agrees to accept, a sum of money in current funds equal to the total value of the Work complete in place, computed by multiplying the final quantities of each item of Work by the Contract unit prices and the amounts established by the approved Schedule of Values for Lump Sum prices as stated in the Bid Form, attached hereto and made a part hereof which is estimated as being the sum of _____ ($_____) ("Contract Sum" or "Contract Price"), in full compensation for furnishing all materials, doing of all the Work described under the Contract, as well as all loss or damage, if any, arising out of the nature of the Work.

## ARTICLE 5-PAYMENTS

**5.01** Contractor shall submit Applications for Payment to Engineer in accordance with Section 01 29 00 Payment Procedures and Section 01 20 00 – Measurement and Payment Procedures of the specifications. Contractor will be paid for all Work satisfactorily completed on the basis of an approved **Schedule of Values**, minus retainage in accordance with Mississippi Code § 31-5-33 (Attachment H).

**5.02** Contractor will be paid in arrears after the rendition of services on a monthly basis on

presentation of a complete and certified Application for Payment to the Engineer for Work performed pursuant to the Schedule of Values and the Contractor's Bid. Pursuant to Mississippi Code § 31-5-33, retainage in the amount of five percent (5%) shall be withheld until the Project is certified by Contractor and the Engineer as being fifty percent (50%) complete, at which time retainage will be withheld in the amount of two and one-half percent (2.5%) for the remainder of the project and fifty percent (50%) of the retainage may be released to Contractor for proportional distributions to Contractor and its subcontractors of the retainage withheld through the first half of the Project. The final payment and remaining retainage shall be paid to Contractor when the Project is certified by Contractor, MDMR and its Engineer as having been completed. At no point shall the retainage withheld by Contractor from a subcontractor exceed the retainage withheld by MDMR from Contractor. Contractor is not required by this section to withhold a retainage from its subcontractors, particularly those that have completed their portion of the Project.

**5.03** Contractor shall provide the Engineer with a monthly Application for Payment by the 25th of each month. Applications for Payment must be approved by the Engineer prior to being submitted to the MDMR for payment. Payments will be made by the MDMR in accordance with Mississippi Code § 31-7-305 (Attachment H). All payments are subject to the availability of funding as stated in the Terms and Conditions.

**5.04** Upon final completion and acceptance of the Work and completion of all punch list items from the Final Inspection and approval of Project closeout requirements as defined by Section 01 77 00 – Closeout Procedures, the Engineer will recommend final payment to the MDMR. Final Payment will be made by the MDMR in accordance with Mississippi Code § 31-7-305 which will be inclusive of withheld retainage in accordance with Mississippi Code § 31-5-33.

## ARTICLE 6-CONTRACTOR'S REPRESENTATIONS

In order to induce MDMR to enter into this Agreement Contractor makes the following representations:

**6.01** Contractor has examined and carefully studied the Contract and the other related data identified in the Contract Documents.

**6.02** Contractor has visited the site and become familiar with and is satisfied as to the general, local, and site conditions that may affect cost, progress, performance, or furnishing of the Work.

**6.03** Contractor is familiar with and is satisfied as to all federal, state, and local laws and regulations that may affect cost, progress, performance, and furnishings of the Work.

**6.04** Contractor has read and fully understands all requirements and conditions of all environmental permits that pertain to this Work.

**6.05** Contractor has obtained all required insurance policies, payment bonds, tax bonds and performance bonds required by the Contract Documents.

**6.06** Contractor has carefully studied all reports of explorations and tests of subsurface conditions at or contiguous to the site and all drawings of physical conditions in or relating to existing surface or subsurface structures at or contiguous to the site which have been identified as "additional information" in Section 9 of the MDMR's Terms and Conditions and Appendix A – Southern Earth Science, Inc CPT-1 & CPT-2 – Subsurface Borings. Contractor does not consider that any additional examinations, investigations, explorations, tests, studies, or data are necessary for the performance and furnishing of the Work at the Contract Price, within the Contract Time and in accordance with the other terms and conditions of the Contract Documents.

**6.07** Contractor is aware of the general nature of the Work to be performed under this solicitation as indicated in the Contract Documents.

**6.08** Contractor has correlated the information known to Contractor, information and observations obtained from visits to the site, reports, and drawings identified in the Contract Documents and all additional examinations, investigations, explorations, tests, studies, and data with the Contract Documents.

**6.09** Contractor has given MDMR written notice of all conflicts, errors, ambiguities, or discrepancies that Contractor has discovered in the Contract Documents and the written resolution thereof by MDMR is acceptable to Contractor, and the Contract Documents are generally sufficient to indicate and convey understanding of all terms and conditions for performance and furnishing of the Work. When said conflicts, errors, ambiguities, or discrepancies have not been resolved through interpretation or clarification by MDMR for whatever reason, Contractor has included in its Bid the greater quantity or better quality of work, or compliance with the more stringent requirement resulting in a greater cost; and such is included in the Contract Price.

## ARTICLE 7-CONTRACT DOCUMENTS

The Contract Documents which comprise the entire agreement between MDMR and Contractor concerning the Work includes the:

1. Change Orders, Supplemental Agreements and/or other modifications to the Agreement;
2. This Agreement;
3. MDMR Terms and Conditions;
4. Any and all Addendums;
5. Specifications, including all Divisions and the Appendices;
6. Contract Drawings;
7. Contractor's Bid, including all subparts, attachments and documents submitted therewith;
8. Notice of Award;

**9.** Notice to Proceed;
**10.** Invitation for Bids;
**11.** Performance Bond;
**12.** Payment Bond;
**13.** Tax Bond; and
**14.** Insurance Certificates and Endorsements.

The documents listed above are attached to this Agreement (except as expressly noted otherwise above). The Contract Documents may only be amended, modified, or supplemented as provided in Sections 22 through 24 of the MDMR Terms and Conditions. In the event of a conflict in the provisions of the Contract Documents, the terms of the document listed first above shall control.

IN WITNESS WHEREOF, MDMR and Contractor have signed this Agreement in triplicate. One counterpart each has been delivered to MDMR, Contractor, and the Engineer.

This Agreement will be effective on _____, 20_____
(Which is the Effective Date of the Agreement)

MDMR _____ Contractor _____

By _____ By _____

(CORPORATE SEAL)

Address for giving notices

_____

_____

Address for giving notices

_____

_____

Mississippi License No. _____

_____

(If Contractor is a corporation, attach evidence of authority to sign).

**END OF SECTION 00 52 15**

# SECTION 01 20 00

# MEASUREMENT AND PAYMENT PROCEDURES

## PART 1 - GENERAL

### 1.01 SUMMARY

**A.** This section includes requirements to be used for the basis of measurement and payment. The Contractor shall receive and accept the compensation provided in the Bid Form as full payment for furnishing all materials, labor, tools, and equipment for performing all operations necessary to complete the Work under the Contract. Payment for all loss or damages arising from the nature of the Work, or from the action of the elements or any unforeseen difficulties, encountered during the Work until final acceptance by MDMR will be the responsibility of the Contractor.

**B.** Bid prices for the various work items are to establish a total price for completing the Project in its entirety. The Contractor shall include in the Bid, any item for which a separate pay item has not been established in the Bid Form, to reflect the total price for completing the Project in its entirety, as depicted on the Construction Drawings and specified herein, unless there is a specific line item for administrative costs (e.g., Project Management, Quality Control and Safety), allocate such costs proportionally across all line items. The Contractor must include all costs for this Project to complete all work, in total, designated in the construction drawings, specifications, and Bid Form.

### 1.02 SUBMITTALS

**A.** The following submittals shall be submitted in accordance with **SECTION 01 33 00 – SUBMITTAL PROCEDURES.**

**1.** Schedule of Values

**a.** The Contractor will submit a printed Schedule of Values on Contractor's standard form acceptable to MDMR in electronic printout for review and approval prior to the first Application for Payment. List payment items sequentially in the same order as they appear in the Bid Form.

**b.** Lump sum items are to have adequate breakdown of components to facilitate evaluating completeness for payment in accordance with Section 01 29 73 - SCHEDULE OF VALUES. Breakdown components shall appear directly under the payment item heading to which they apply.

**c.** The Contractor will revise the Schedule of Values to list approved Change Orders, with each Application for Payment. The Contractor will submit revised Schedule of Values in accordance with this Specification.

**2.** Construction Schedule

**a.** Within ten (10) days after effective date of Contract, the Contractor shall prepare and submit, to the Engineer for approval, a construction schedule in the form of a CPM progress chart. The Contractor shall indicate on the progress chart the bid items contained in the Contract showing the amount of the item and its relative weighted percentage of the total Contract. The Contractor may separate features of work under each item to show salient work elements such as procurement of materials, plants, and equipment, and supplemental work elements such as excavation, fill, etc. These salient features shall total to the cost and weighted percentages shown for the major bid item. When quantity variations impact the weighted percentages of a separate item by five percent or more, the Contractor shall revise the contract progress charts to accurately reflect the impact of such variations.

**b.** Submit copies of the updated construction schedule to the Engineer for each Application for Payment. Changes that have occurred since the last update shall be clearly marked.

## 1.03 MEASUREMENT

**A.** Measurement for Payment for this Project is based upon completion of the Work in accordance with Construction Drawings and Specifications for each of the items. Field measurements will determine the percent complete of work components when listed on the approved Schedule of Values.

**B.** The Contractor will take all measurements and compute quantities. The Engineer will verify measurements and quantities as appropriate.

**C.** The Contractor will assist the Agency by providing necessary equipment, workers, and survey personnel as required.

## 1.04 BASIS FOR PAYMENT

**A.** Unless otherwise indicated on the Contract Documents, all work indicated on the Construction Drawings and specified in the Contract Documents shall be included in the Contract Sum indicated on the Bid Form.

**B.** Prices stated in the Bid Form shall include all costs and expenses for taxes (inclusive of applicable Contractor's tax per Miss. Code Ann. § 27-65-21), labor, equipment, materials, commissions, transportation charges and expenses, patent fees and royalties, labor for handling materials during inspection, together with any and all other costs and expenses for performing and completing the Work as depicted on the Construction Drawings and specified herein. The basis of payment for an item in the amount shown in the Bid Form shall be in accordance with the description of that item provided in this Section.

**C.** The Contractor's attention is again called to the fact that the quotations for the various items of work are intended to establish a total price for completing the Work in its entirety. Should the Contractor feel that the cost for any item of work has not been established by the Bid Form, the Contractor shall include the cost for that work in another applicable bid item, in order that the Bid for the project reflects the total price to be paid by the Agency for completing the Work in its entirety.

**D.** Changes in the Contract Price and Contract Time require prior authorization in writing from MDMR and the Engineer, in the form of a Change Order. The Contractor is responsible for verification of all bid quantities and to report to the Engineer any discrepancies found prior to ordering materials and/or equipment for construction.

**E.** The various major items of Work will be paid for either by 1) the quantity of the actual Work completed by the Contractor and accepted by the Engineer multiplied by the unit price; or, 2) a pro rata amount based on the percentage complete of any lump sum Bid Item. The Work shall include all miscellaneous and ancillary items necessary to construct a complete and functional Project.

## 1.05 SCHEDULE OF VALUES

The below descriptions generally outline the scope of work required for those elements of the Work to be paid for under each item listed in the Bid Form. The Contractor shall submit a Schedule of Values per SECTION 01 29 73 – SCHEDULE OF VALUES and shall be consistent with SECTION 01 33 00 – SUBMITTAL PROCEDURES.

## 1.06 PAYMENT ITEMS

**A.** Basis of Payment for Unit Price Items

**1.** Unit price items indicated in the Bid Form are for bidding and contract purposes only. Quantities and measurements supplied or placed in the Work and verified by the Engineer determine payment.

**2.** If the actual Work requires more quantities than those required by the Base Bid, the Contractor will provide the required quantities at the unit prices contracted.

**B.** Basis of Payment for Lump Sum Items - Payment for lump sum items for this Project will be made at the lump sum price named in the Contract. The contract price shall constitute full compensation for each item, including all required labor, products, tools, equipment, plant, transportation, services and incidentals, erection, application or installation of an item of the Work, overhead and profit as required to complete the item as indicated in the Construction Drawings and Specifications.

**C.** Progress Payments

**1.** Applications for Payment shall be submitted to MDMR or the Engineer at the times specified in Article 5 of the Agreement (Section 00 52 15).

**2.** Final payment for Work governed by unit prices will be made on the basis of the actual measurements and quantities accepted by the Engineer multiplied by a unit price of the item. Final payment for unit price Work will be accomplished by reconciliation of Change Orders to adjust quantities on a monthly basis.

**3.** No payment, partial, or complete, will be made for defective or rejected work.

**4.** No separate payment will be made for additional labor and materials required for accomplishing the Project in its entirety, unless a Change Order is entered. All labor, materials, and incidental costs shall be included for payment as part of the Bid and the Contract, under the several scheduled items of the Project.

## 1.07 DESCRIPTION OF WORK ITEMS AND SCHEDULE OF VALUES

**A.** The Work items are described in order to assist the Contractor in the preparation of the Bid and to assist the Engineer in the evaluation of Bids and progress payments during construction. The Contractor shall submit a Schedule of Values containing the Work components of each Bid Item in their Bid for approval prior to the first Application for Payment for work in progress.

**B.** No separate payment will be made for any testing performed to complete the Work; costs for testing (as applicable), are included in the cost to complete the work item. Contractor shall be responsible for all scheduling, labor and costs to sample and test work performed for compliance with the contract drawings and specifications. Sampling and testing include but is not limited to; material proctors, compaction test, compressive strength test of all precast concrete. All sampling and testing shall be completed and certified by a third-party contractor approved by MDMR and/or Engineer.

**C.** Submittals are considered part of the Contractor's administrative and overhead costs. The Contactor will not be compensated separately for submittals required by these specifications or those listed on the Construction Drawings.

**D.** Separate payment will not be made for providing and maintaining an effective Quality Control program, and all costs associated there with shall be included in the applicable unit prices or lump-sum prices contained in the Bid Form.

**E.** For the purpose of the work items listed below, complete installation will mean the inclusion of preliminary surveying, preliminary photographic documentation, mobilization and demobilization, quality control documentation of materials, delivery of materials to the Project site, installation of materials and any ancillary components, sampling and testing of installed materials, photographic documentation, surveying during and after construction, and any overhead related items associated with Division 01 of the Contract Documents.

**F.** Below is a description of the Work listed in the Bid Form (Attachment D). This description is not intended to be a complete and all-inclusive record of the required work items. Work includes but is not limited to the following:

**1.** Lump Sum Items:

**a.** All costs required to construct the double barrel concrete outfall structure, adjoining flatwork; including ramps, handrails, pavilion structure, lighting, volleyball courts and equipment and all other appurtenances as shown on the plans and described in the specifications.

**2.** Unit Price Items:

**a.** Additional stone if quantities are over and above design and directed for use by the Engineer. Over excavation on the part of the contractor will not justify additional stone unless directed by the Engineer.

**b.** Select sand fill if required to be imported to the site as directed by the Engineer

## 1.08 DEFECTIVE WORK

The remediation, removal or replacement of defective work is addressed by Section 13 of the MDMR Standard Contract Terms & Conditions.

## 1.09 NON-PAYMENT

**A.** Notwithstanding any of the foregoing, payment will not be made for any of the following:

**1.** Products wasted or disposed of in a manner that is not acceptable;

**2.** Products determined as unacceptable before or after placement;

**3.** Products damaged in transit, during handling, or due to improper storage;

**4.** Products not completely unloaded from the transporting vehicle;

**5.** Products placed beyond the lines and levels of the required Work;

6. Products remaining on hand after completion of the Work;
7. Removing, demolishing, and disposing of rejected Work;
8. Loading, hauling, and disposing of rejected Products;

**PART 2 - PRODUCTS (NOT APPLICABLE)**

**PART 3 - EXECUTION (NOT APPLICABLE)**

**END OF SECTION 01 20 00**

# SECTION 01 29 00

# PAYMENT PROCEDURES

## PART 1 - GENERAL

### 1.01 SUMMARY

**A.** This Section includes administrative and procedural requirements necessary to prepare and process applications for payments.

### 1.02 RELATED SECTIONS

**A.** Sections 25 and 46 of the standard Contract Terms and Conditions

**B.** Section 00 52 15 – Agreement

**C.** Section 01 31 00 – Project Management and Coordination

**D.** Section 01 32 00 – Construction Progress Documentation

**E.** Section 01 32 33 – Photographic Documentation

**F.** Section 01 33 00 – Submittal Procedures

**G.** Section 01 77 00 – Closeout Procedures

### 1.03 SUBMITTALS

**A.** Submit three (3) paper copies and one searchable PDF file of the Application for Payment (including updated progress schedule) to Engineer by the 25th of each month in accordance with the requirements set forth in **SECTION 00 52 15 – AGREEMENT and SECTION 01 33 00 – SUBMITTAL PROCEDURES.**

### 1.04 FORMAT AND DATA REQUIRED

**A.** Submit applications typed on the Application for Payment form provided by the Agency/MDMR, with itemized data typed on 8-1/2" x 11" white paper continuation sheets.

**B.** Provide itemized data on continuation sheet:

**1.** Format, schedules, line items and values: Those of the Schedule of Values accepted by Agency's Representative.

### 1.05 PREPARATION OF EACH PROGRESS APPLICATION FOR PAYMENT

**A.** Application Form:

**1.** Fill in required information, including information for Change Orders executed prior to date of submittal of application.

**2.** Fill in summary of dollar values to agree with respective totals indicated on continuation sheets.

3. Execute certification with signature of a responsible officer of Contractor.
   a. Continuation Sheets:
4. Fill in total list of all scheduled component items of Work, with item number and scheduled dollar value for each item.
5. Fill in dollar value in each column for each scheduled line item when work has been performed or products stored. Stored materials may be allowed only in special cases and requires direct written approval from MDMR for such costs to be reimbursable prior to material installation.
6. List each Change Order executed prior to date of submission, at the end of the continuation sheets.
7. Calculate the retainage amount in accordance with Mississippi Code 31-5-33 (Attachment H). See Article 5, Paragraph 5.02 in Section 00 52 15 – Agreement for retainage requirements.
8. Calculate the total amount due by subtracting the retainage from the total earned and previously paid.

## 1.06 SUBSTANTIATING DATA FOR PROGRESS APPLICATION FOR PAYMENTS

**A.** Contractor shall submit suitable information, including the following, with a cover letter identifying:

1. Project;
2. Application number and date;
3. Updated Construction Schedule in accordance with Section 01 32 00 – CONSTRUCTION PROGRESS DOCUMENTATION;
4. Construction Photographs in accordance with Section 01 32 33 – PHOTOGRAPHIC DOCUMENTATION; and

**B.** Submit one copy of data and cover letter for each copy of application.

## 1.07 PREPARATION OF APPLICATION FOR FINAL PAYMENT

**A.** Fill in Application form as specified for progress payments.

**B.** Use continuation sheet for presenting the final statement of accounting as specified in Section 01 77 00 – CLOSEOUT PROCEDURES.

**C.** Submit Release of Claims Form

## 1.08 SUBMITTAL PROCEDURE

A. Submit Application for Payment to Engineer at:

**\ (BY MAIL)** **COVINGTON CIVIL AND ENVIRONMENTAL, LLC**

Attn: Ben Benvenutti

2510 14th Street, Ste. 1010

Gulfport, MS 39501

**\ (FOR DIRECT DELIVERY)** **COVINGTON CIVIL AND ENVIRONMENTAL, LLC**

Attn: Ben Benvenutti

2510 14th Street, Ste. 1010

Gulfport, MS 39501

**\ (BY EMAIL)** bbenvenutti@cce.ms

B. Number: Three paper copies and one (1) searchable PDF copy of each Application.

C. When Engineer finds Application properly completed and correct, he/she will transmit certificate for payment to MDMR.

**PART 2 - PRODUCTS (NOT APPLICABLE)**

**PART 3 - EXECUTION (NOT APPLICABLE)**

**END OF SECTION 01 29 00**

# SECTION 01 29 73

# SCHEDULE OF VALUES

## PART 1 - GENERAL

### 1.01 SUMMARY

**A.** Procedure for submission of a certified Schedule of Values for review and approval by the Engineer and Agency/MDMR.

### 1.02 RELATED SECTIONS

**A.** Attachment D – Bid Form

**B.** Section 01 20 00 – Measurement and Payment Procedures

**C.** Section 01 29 00 – Payment Procedures

### 1.03 SUBMITTAL

**A.** The Contractor shall provide a Schedule of Values in format similar to the Engineers Joint Contract Documents Committee (EJCDC) Schedule of Value Forms.

## PART 2 - PRODUCTS (NOT APPLICABLE)

## PART 3 - EXECUTION

### 3.01 PREPARATION

**A.** Upon receipt of the Notice of Award, Contractor shall commence preparation of a Schedule of Values for Lump Sum items and Unit Price items in accordance with the Bid Form. All items shall be broken down into location specific headings.

**B.** Schedule of Values format and content shall be approved by the Engineer and Agency prior to submittal of first payment request.

**C.** Contractor shall coordinate the preparation of a Schedule of Values with preparation of the Construction Schedule as set forth in Section 01 32 00 – CONSTRUCTION PROGRESS DOCUMENTATION. The corresponding values from the Bid Form shall match with the approved Schedule of Values.

**D.** Include the following Project identification on a certified Schedule of Values:

**1.** Project name and location;

**2.** Project Number;

**3.** Contract #;

**4.** Contractor name; and

**5.** Date of Submittal.

**E.** The Schedule of Values shall be in an Excel format, tabular form with separate columns and shall include the following items:

1. Related Specification Section and Division;
2. Description of Work;
3. Name of Subcontractor, manufacturer or supplier;
4. Dollar value, quantity and unit of measure of each line item; and
5. Percentage of Contract amount to nearest one-hundredth percent, adjusted to total 100%.

**F.** Provide a breakdown of the Contract Amount in enough detail acceptable to Engineer and Agency/MDMR to facilitate continued evaluation of Application for Payment and progress reports.

**G.** Each item in the Schedule of Values and Applications for Payment shall be complete. Include total cost and proportionate share of general overhead and profit for each Lump Sum line item.

**H.** Temporary facilities and other cost items that are not direct cost of actual work-in-place shall be shown as separate line items.

**I.** An approved certified Schedule of Values shall serve as the basis for the monthly certified Application for Payment.

**J.** If at any time, Agency determines, in its reasonable discretion, that the Schedule of Values does not approximate the actual cost being incurred by Contractor to perform the Work, Contractor shall prepare a revised Schedule of Values, which then shall be used as the basis for future progress payments. Without changing the Contract Amount, Agency reserves the right to require Contractor:

1. To increase or decrease amounts within the line items in the Schedule of Values; and,
2. To conform the price breakdown to Agency accounting practice.

## 3.02 SUBMITTAL

**A.** Contractor shall submit three (3) paper copies, one (1) searchable PDF digital file and one (1) digital Excel file of the Schedule of Values for review and approval at least fourteen (14) days before the first Application for Payment.

**B.** Agency will review and if necessary, return the submitted Schedule of Values with summary comments noting items not in compliance with the requirements of the Contract Documents.

**C.** Contractor shall revise the submitted Schedule of Values and return three (3) paper copies and one (1) searchable PDF digital file and one (1) digital Excel file within three (3) days of receipt of summary comments.

**END OF SECTION 01 29 73**

# SECTION 01 31 00

# PROJECT MANAGEMENT AND COORDINATION

## PART 1 - GENERAL

### 1.01 SUMMARY:

### 1.02 THIS SECTION ADDRESSES:

**A.** General requirements;

**B.** Preconstruction conference;

**C.** Request for Information (RFIs);

**D.** Schedule finalization meeting;

**E.** Progress meetings;

**F.** Pre-installation conferences; and

**G.** Final Inspection.

### 1.03 RELATED SECTIONS

**A.** Section 01 32 00 – Construction Progress Documentation

**B.** Section 01 33 00 – Submittal Procedures

**C.** Section 01 40 00 – Contractor Quality Control

**D.** Section 01 77 00 – Closeout Procedures

### 1.04 SUBMITTALS

**A.** Subcontract List: Prepare a digital, written summary identifying individuals or firms proposed for each portion of the Work, including those who are to furnish products or equipment fabricated to a special design. Include the following information in tabular form with the required request to subcontract form provided in Attachment G:

**1.** Name, address, and telephone number of entity performing subcontract or supplying products.

**2.** Number and title of related Specification Section(s) covered by subcontract.

**3.** Drawing number and detail references, as appropriate, covered by subcontract.

**B.** Key Personnel Names: Within 10 days of Notice to Proceed, submit a list of key personnel assignments, including superintendent and other personnel for the Project. Identify individuals and their duties and responsibilities; list addresses and telephone numbers, including office and cellular telephone numbers and e-mail addresses. Provide names, addresses, and telephone numbers of individuals assigned as alternates

in the absence of individuals assigned to Project.

1. Post copies of list in project meeting room, in temporary field office, and the Engineer/Agency construction trailer, if any. Keep list current at all times.
2. Changes in key personnel shall only occur with written permission of MDMR. Engineer/Agency shall have the right of reasonable rejection and approval of staff as provided in Section 6 of the Standard Contract Terms and Conditions.
3. Engineer/Agency has the right to raise and discuss adverse issues about any staff or subcontractor employed by the Contractor.

## 1.05 PROJECT COORDINATION

**A.** Coordination: Coordinate construction operations included in different Sections of the Specifications to ensure efficient and orderly installation of each part of the Work. Coordinate construction operations, included in different Sections that depend on each other for proper installation, connection, and operation.

1. Schedule construction operations in sequence required to obtain the best results where installation of one part of the Work depends on installation of other components, before or after its own installation.
2. Coordinate submittals, surveying, availability of equipment, delivery of materials to ensure efficient use of resources and time management.
3. Make adequate provisions to accommodate items scheduled for later installation.

**B.** Prepare memoranda for distribution to each party involved, outlining special procedures required for coordination. Include such items as required notices, reports, and list of attendees at meetings.

1. Prepare similar memoranda for Agency and separate contractors if coordination of their Work is required.
2. Administrative Procedures: Coordinate scheduling and timing of required administrative procedures with other construction activities to avoid conflicts and to ensure orderly progress of the Work. Such administrative activities include, but are not limited to, the following:
   - **a.** Preparation of Contractor's construction schedule;
   - **b.** Preparation of the schedule of values;
   - **c.** Delivery and processing of submittals;
   - **d.** Progress meetings;
   - **e.** Pre-installation conferences; and

**f.** Project closeout activities.

## 1.06 REQUEST FOR INFORMATION (RFI)

**A.** General: Immediately on discovery of the need for additional information or interpretation of the Contract Documents, Contractor shall prepare and submit an RFI in a format acceptable to the Engineer.

**1.** All RFIs must be submitted by the Contractor. Engineer will return RFIs submitted to Engineer by other entities controlled by Contractor with no response.

**2.** Coordinate and submit RFIs in a prompt manner so as to avoid delays in Contractor's work or work of subcontractors.

**3.** Do not use RFIs for any purpose other than to request additional information or interpretation of the Contract Documents.

**B.** Content of the RFI: Include a detailed, legible description of item needing information or interpretation and the following:

**1.** Project name;

**2.** Project number;

**3.** Date;

**4.** Name of Contractor;

**5.** Name of Engineer;

**6.** RFI number, numbered sequentially;

**7.** RFI subject;

**8.** Specification Section number, title and related paragraphs, as appropriate;

**9.** Drawing number and detail references, as appropriate;

**10.** Field dimensions and conditions, as appropriate;

**11.** Contractor's suggested resolution. If Contractor's suggested resolution impacts the Contract Time or the Contract Sum, Contractor shall state impact in the RFI.

**12.** Contractor's signature; and

**13.** Attachments: Include sketches, descriptions, measurements, photos, product data, shop drawings, coordination drawings, and other information necessary to fully describe items needing interpretation.

a. Include dimensions, thicknesses, location and/or station number, and details of the affected area or facilities impacted by the RFI.

**C.** RFI Forms: Software-generated form with substantially the same content as indicated

above, acceptable to Engineer.

1. Attachments shall be electronic files in searchable Adobe Acrobat PDF format.
2. Engineer's Action: Engineer will review each RFI, determine action required, and respond. Allow seven working days for Engineer's response for each RFI. RFIs received by Engineer after 1:00 p.m. will be considered as received the following working day.
3. The following Contractor-generated RFIs will be returned without action:
   a. Requests for approval of submittals.
   b. Requests for approval of substitutions.
   c. Requests for approval of Contractor's means and methods.
   d. Requests for coordination information already indicated in the Contract Documents.
   e. Requests solely for adjustments in the Contract Time or the Contract Sum.
   f. Requests for interpretation of Engineer’s actions on submittals.
   g. Incomplete RFIs or inaccurately prepared RFIs.
4. Engineer's action may include a request for additional information, in which case Engineer's time for response will date from time of receipt of additional information.
5. Engineer's action on RFI’s that may result in a change to the Contract Time or the Contract Sum may be eligible for Contractor to submit Change Order request according to the Change Order procedures in Section 22 of the Standard Contract Terms and Conditions.
   a. If Contractor believes the RFI response warrants change in the Contract Time or the Contract Sum, notify Engineer in writing within 7 days of receipt of the RFI response.
6. RFI Log: Prepare, maintain, and submit a tabular log of RFIs organized by the RFI number. Submit log weekly. Include the following:
   a. Project name;
   b. Name and address of Contractor;
   c. Name and address of Engineer;
   d. RFI number including RFIs that were returned without action or withdrawn;
   e. RFI description;

**f.** Date the RFI was submitted; and

**g.** Date Engineer's response was received.

**7.** On receipt of Engineer's action, update the RFI log and immediately distribute the RFI response to affected parties. Review response and notify Engineer within seven (7) days if Contractor disagrees with response. Include the following:

**8.** Identification of related minor change in the Work, Work Change Directive, and Change Order request, as appropriate.

## 1.07 PROJECT MEETINGS

**A.** General: Schedule and conduct meetings and conferences at Project site unless otherwise indicated.

**1.** Attendees: Inform participants and others involved, and individuals whose presence is required, of date and time of each meeting.

**a.** Notify Agency and Engineer of scheduled meeting dates and times five (5) days in advance.

**b.** The Agency and/or Engineer shall be permitted to attend meetings held at the Project Site.

**c.** Representatives of contractors, subcontractors, and suppliers attending meetings shall be qualified and authorized to act on behalf of the entity each represents.

**2.** Agenda: Prepare the meeting agenda. Distribute the agenda to attendees.

**3.** Minutes: Entity responsible for conducting meeting will record significant discussions and agreements achieved. Distribute the meeting minutes within five days of the meeting:

**a.** To all participants in meetings; and,

**b.** To Agency and Engineer.

**4.** Engineer will schedule and administer pre-construction meeting, regularly scheduled progress meetings, and specially called meetings throughout the progress of the Work. Engineer will:

**a.** Prepare agendas for meetings, including items requested by Agency and Contractor;

**b.** Notify Agency and Contractor five (5) days in advance of meeting date; and,

**c.** Preside at such meetings.

**5.** Contractor will schedule and administer pre-installation conferences. Contractor

shall:

**a.** Attend all meetings;

**b.** Arrange for the attendance of Contractor's agents, employees, subcontractors, and suppliers as appropriate to the agenda; and,

**c.** Make physical arrangements for meetings.

**B.** PRECONSTRUCTION CONFERENCE

**1.** Engineer will schedule a conference after Notice of Award and before commencement of the Work.

**2.** Location: A central site, convenient for all parties

**3.** The representatives that should be in attendance include:

**a.** Agency's Representative;

**b.** Program Manager's Representative(s);

**c.** Engineer and his professional consultants;

**d.** Resident Project Representative;

**e.** Contractor's Superintendent;

**f.** Major Subcontractors;

**g.** Major Suppliers; and,

**h.** Others as appropriate.

**4.** The agenda may include:

**a.** Contractual matters;

**b.** Submission of executed bonds and insurance certificates;

**c.** Distribution of Contract Documents;

**d.** Submission of list of subcontractors and suppliers, list of products, Schedule of Values, and progress schedule;

**e.** Designation of key personnel representing the parties in Contract and the Engineer;

**f.** Procedures and processing of field decisions, submittals, substitutions, applications for payments, cost proposal requests, Change Orders and Contract Closeout Procedures;

**g.** Establishment of official date of Notice to Proceed (NTP);

**h.** Establishment of mailing address and local office for the Contractor;

**i.** Establishment of cut-off dates and payment request submittals;

**j.** CQC plan as defined in Section 01 40 00 – Contractor Quality Control;

**k.** Construction scheduling and updates;

**l.** Construction photographs and video requirements;

**m.** Environmental permit compliance during construction;

**n.** Critical work sequencing;

**o.** Major material deliveries and priorities;

**p.** Procedures for maintaining Record Documents;

**q.** Construction facilities, controls and construction aids;

**r.** Temporary utilities provided by Contractor;

**s.** All safety and first-aid procedures are responsibility of the Contractor;

**t.** Hurricane/Storm Preparedness Plan;

**u.** Security and housekeeping procedures as required by the Agency;

**v.** Procedures for testing; and,

**w.** Providing electronic design files to the Contractor.

**5.** The Contractor shall bring to this conference the following items in either completed or draft form:

**a.** Accident Prevention Plan;

**b.** Activity Hazard Analysis;

**c.** Job Hazard Analysis for each employee classification;

**d.** Material Safety Data Sheets;

**e.** Letter appointing representatives;

**f.** List of Subcontractors;

**g.** Listing of First Aid and CPR trained personnel; and,

**h.** Work Plan.

**C.** SCHEDULE FINALIZATION MEETING

**1.** Contractor will schedule at least ten (10) days before submission of the first Application for Payment.

2. Location: A central site convenient for all parties.
3. The representatives that should be in attendance include:
   a. Agency's representative;
   b. Engineer;
   c. Contractor; and
   d. Others, as appropriate.
4. The suggested agenda for this meeting is:
   a. Schedule of Values;
   b. Construction Schedule;
   c. Submittal Schedule; and
   d. Questions.

D. PROGRESS MEETINGS

1. Engineer will schedule and administer monthly meetings throughout progress of the Work.
2. Location of the Meetings: The project field office of the Contractor, or other locations arranged for by Contractor, convenient to all parties.
3. The representatives that should be in attendance include:
   a. Agency's Representative;
   b. Engineer, and his professional consultants as needed;
   c. Resident Project Representative;
   d. Contractor's Superintendent;
   e. Subcontractors as appropriate to the agenda;
   f. Suppliers as appropriate to the agenda; and,
   g. Others, as appropriate.
4. The suggested agenda for this meeting is:
   a. Review minutes of previous meetings;
   b. Review unresolved issues from last meeting;
   c. Safety; and
   d. Contractor's Construction Schedule:

1) Review progress since the last meeting;
2) Determine whether each activity is on time, ahead of schedule, or behind schedule, in relation to Contractor's construction schedule;
3) Determine how behind schedule activities will be expedited; secure commitments from parties involved to do so;
4) Discuss whether schedule revisions are required to ensure that current and subsequent activities will be completed within the Contract Time;
5) Identification of problems which impede planned progress;
6) Planned progress during succeeding work period; and.
7) Make necessary revisions to construction schedule.

**e.** Review of submittals schedule and status of submittals;

**f.** Review of material delivery schedules;

**g.** Access;

**h.** Site Utilization;

**i.** Temporary facilities;

**j.** Maintenance of quality and work standards;

**k.** Status of RFIs;

**l.** Status of proposal request;

**m.** Pending changes;

**n.** Status of Change Orders;

**o.** Pending claims and disputes;

**p.** Documentation of information for payment request; and,

**q.** Long-term weather conditions.

**E.** PRE-INSTALLATION CONFERENCES

**1.** When required in individual specification Section, Contractor will convene a pre-installation conference at work site prior to commencing work of the Section.

**2.** Contractor will require attendance of parties directly affecting, or affected by, work of the specific Section.

**3.** Contractor will notify Engineer at least four (4) days in advance of meeting date.

**4.** Contractor will prepare agenda, preside at conference, record minutes, and

distribute copies within two (2) days after conference to participants, with two (2) copies to Engineer and Agency.

**5.** Review conditions of installation, preparation and installation procedures, and coordination with related work.

**F.** FINAL INSPECTION

**1.** Contractor shall notify the Engineer and Agency and certify that the Project is complete and request a date and time for a Final Inspection.

**2.** Final Inspection will be conducted in accordance with the procedures identified in Section 01 77 00 CLOSEOUT PROCEDURES.

**1.08 HAZARD ANALYSIS PLAN: THE FOLLOWING ADDITIONAL ITEMS WILL BE REQUIRED UNDER THE CONTRACT:**

**A.** A Job Hazard Analysis is required for each person employed on this job. Prior to beginning the job, a Job Hazard Analysis shall be prepared by the Contractor. The analysis will address the hazards in each job classification and will present the procedures and safeguards necessary to provide a safe working environment for that employee. The Contractor shall provide a means to assure that each employee has an opportunity to provide input to his/her Job Hazard Analysis and proof of employee understanding by having the employee sign a copy of his/her analysis.

**B.** Contractor should assure an understanding on the part of employee and supervisor alike that no new task having potential as a hazard will be undertaken without through discussion between them to determine the safest means to accomplish the task. The Job Hazard Analysis will then be modified accordingly.

**PART 2 - PRODUCTS (NOT APPLICABLE)**

**PART 3 - EXECUTION (NOT APPLICABLE)**

**END OF SECTION 01 31 00**

# SECTION 01 32 00

# CONSTRUCTION PROGRESS DOCUMENTATION

## PART 1 - GENERAL

### 1.01 SUMMARY

**A.** This Section includes administrative and procedural requirements for documenting the progress of construction during the performance of the Work, including the following:

**1.** Startup construction schedule;

**2.** Contractor's construction schedule;

**3.** Updated construction schedule with updating report;

**4.** Daily construction reports;

**5.** Material location reports;

**6.** Site condition reports; and

**7.** Special reports.

### 1.02 RELATED SECTIONS

**A.** Section 01 29 00 - Payment Procedures

**B.** Section 01 31 00 – Project Management and Coordination

**C.** Section 01 32 23 – Surveys and Layout Data

**D.** Section 01 32 33 - Photographic Documentation

**E.** Section 01 33 00 – Submittal Procedures

**F.** Section 01 35 43 – Environmental Protection

**G.** Section 01 40 00 – Contractor Quality Control

**H.** Section 01 77 00 –Closeout Procedures

### 1.03 SUBMITTALS

**A.** Format for Submittals: Submit required submittals in the following format:

**1.** Working electronic copy of schedule file;

**2.** Fully searchable PDF electronic file; and

**3.** Three (3) paper copies.

**B.** Startup construction schedule

**1.** Approval of cost-loaded, startup construction schedule will not constitute approval

of schedule of values for cost-loaded activities.

**C.** Startup Network Diagram: Of size required to display entire network for entire construction period. Show logic ties for activities.

**D.** Contractor's Construction Schedule: Initial schedule, of size required to display entire schedule for entire construction period.

**1.** Submit a working electronic copy of schedule, as described in this Section, and labeled to comply with requirements for submittals. Include type of schedule (initial or updated) and date on label.

**E.** Updated Construction Schedule with Updating Report: Submit with Applications for Payment

**F.** Daily Construction Reports: Submit at weekly intervals.

**G.** Material Location Reports: Submit at monthly intervals.

**H.** Site Condition Reports: Submit at time of discovery of differing conditions.

**I.** Special Reports: Submit at time of unusual event.

## 1.04 COORDINATION

**A.** Coordinate preparation and processing of schedules and reports with performance of construction activities and with scheduling and reporting of separate contractors.

**B.** Coordinate Contractor's construction schedule with the schedule of values, submittal schedule, progress reports, payment requests, and other required schedules and reports.

**1.** Secure time commitments for performing critical elements of the Work from entities involved.

**2.** Coordinate each construction activity in the network with other activities and schedule them in proper sequence.

# PART 2 - PRODUCTS

## 2.01 CONTRACTOR'S CONSTRUCTION SCHEDULE, GENERAL

**A.** Time Frame: Extend schedule from date established for the Notice to Proceed (NTP) to date of final completion.

**1.** Contract completion date shall not be changed by submission of a schedule that shows an early or later completion date, unless specifically authorized by Change Order.

**B.** Activities: Treat each separate area as a separate numbered activity for each main element of the Work. Comply with the following:

1. Activity Duration: Define activities so no activity is longer than thirty (30) days, unless specifically approved by Engineer.
2. Procurement Activities: Include procurement process activities for long lead items and major items, requiring more than sixty (60) days, as separate activities in schedule.
3. Submittal Review Time: Include review and resubmittal times indicated in Section 01 33 00 - SUBMITTAL PROCEDURES in schedule. Coordinate submittal review times in Contractor's construction schedule with submittal schedule.
4. Punch List and Final Completion: Include not more than thirty (30) days for completion of punch list items and final completion. Final completion shall be within the Contract Time.

**C.** Constraints: Include constraints and work restrictions indicated in the Contract Documents and as follows in schedule, and show how the sequence of the Work is affected.

1. Work Restrictions: Show the effect of the following items (if applicable) on the schedule:
   - **a.** Coordination with existing construction;
   - **b.** Uninterruptible services;
   - **c.** Use of premises restrictions;
   - **d.** Provisions for future construction;
   - **e.** Seasonal variations; and
   - **f.** Environmental control.
2. Work Stages: Indicate important stages of construction for each major portion of the Work, including, but not limited to, the following:
   - **a.** Subcontract awards;
   - **b.** Submittals;
   - **c.** Fabrication;
   - **d.** Deliveries;
   - **e.** Installation;
   - **f.** Tests and inspections;
   - **g.** Adjusting;
   - **h.** Curing (if applicable); and

i. Startup and placement into final use and operation (if applicable).

3. Construction Areas: Identify each major area of construction for each major portion of the Work. Indicate where each construction activity within a major area must be sequenced or integrated with other construction activities:

D. Milestones: Include milestones indicated in the Contract Documents in schedule, including, but not limited to, the Notice to Proceed, fabrication of pipe/box culverts, fabrication and delivery of precast panels, and final completion.

E. Cost Correlation: Superimpose a cost correlation timeline, indicating planned and actual costs. On the line, show planned and actual dollar volume of the Work performed as of planned and actual dates used for preparation of payment requests.

1. See Section 01 29 00 Payment Procedures for cost reporting and payment procedures.

F. Upcoming Work Summary: Prepare summary report indicating activities scheduled to occur or commence prior to submittal of next schedule update and submit in accordance with Section 01 31 00 – Project Management and Coordination. Summarize the following issues:

1. Unresolved issues;

2. Unanswered Requests for Information;

3. Rejected or unreturned submittals;

4. Notations on returned submittals; and

5. Pending modifications affecting the Work and Contract Time.

G. Recovery Schedule: When periodic update indicates the Work is fourteen (14) or more calendar days behind the current approved schedule, submit a separate recovery schedule indicating means by which Contractor intends to regain compliance with the schedule. Indicate changes to working hours, working days, crew sizes, and equipment required to achieve compliance, and date by which recovery will be accomplished.

H. Critical Path Identification: The Critical Path Method (CPM) schedule should clearly identify all activities that are on the critical path.

## 2.02 STARTUP/MOBILIZATION CONSTRUCTION SCHEDULE

A. Bar-Chart Schedule: Submit startup, horizontal, bar-chart-type construction schedule within seven (7) days of date established for the Notice to Proceed.

## 2.03 CONTRACTOR'S CONSTRUCTION SCHEDULE (GANTT CHART)

A. Gantt-Chart Schedule: Submit a comprehensive, fully developed, horizontal, Gantt-

chart-type, Contractor's construction schedule using Microsoft Project or similar software approved by the Agency within twenty-one (21) days of date established for the Notice to Proceed. Base schedule on the startup construction schedule and additional information received since the start of Project. Approval of this comprehensive schedule is a condition precedent for payment.

**B.** Preparation: Indicate each significant construction activity separately. Identify first workday of each week with a continuous vertical line.

**1.** For construction activities that require three months or longer to complete, indicate an estimated completion percentage in 10 percent increments within time bar.

## 2.04 REPORTS

**A.** Daily Construction Reports: Prepare a daily construction report recording the following information concerning events at Project site:

**1.** Date of Daily Report;

**2.** List of subcontractors at Project site;

**3.** List of separate contractors at Project site;

**4.** Actual count of all personnel at Project site;

**5.** Regulatory agency or other visiting personnel at Project site;

**6.** Equipment utilized including production time and downtime at Project site;

**7.** Description of all construction activity performed in the last twenty-four (24) hours;

**8.** High and low temperatures and general weather conditions, including presence of rain or snow, high winds, high waves, high tide and low tide;

**9.** Description of any downtime, delay, quality control issue or schedule change;

**10.** Accidents – including, but not limited to incidents involving people or equipment (first-aid, near miss, OSHA recordable or lost time);

**11.** Meetings and significant decisions;

**12.** Unusual events (see special reports);

**13.** Emergency procedures (if appropriate);

**14.** Orders and requests of authorities having jurisdiction;

**15.** Change Orders received and implemented;

**16.** Construction Change Directives received and implemented;

**B.** Site Condition Reports: Immediately on discovery of a difference between site conditions and the Contract Documents, prepare and submit a detailed report. Submit

with a Request for Information. Include a detailed description of the differing conditions, together with recommendations for changing the Contract Documents.

## 2.05 SPECIAL REPORTS

**A.** General: Submit special reports directly to Engineer within one (1) day of an occurrence. Distribute copies of report to parties affected by the occurrence.

**B.** Reporting Unusual Events: When an event of an unusual and significant nature occurs at Project site, whether or not related directly to the Work, prepare and submit a special report. List chain of events, persons participating, and response by Contractor's personnel, evaluation of results or effects, and similar pertinent information. Advise Agency in advance when these events are known or predictable.

# PART 3 - EXECUTION

## 3.01 CONTRACTOR'S CONSTRUCTION SCHEDULE

**A.** Scheduling Consultant: Engage a consultant to provide planning, evaluation, and reporting using CPM scheduling.

**1.** In-House Option: Agency may waive the requirement to retain a consultant if Contractor employs skilled personnel with experience in CPM scheduling and reporting techniques.

**2.** Meetings: Scheduling consultant or Contractor’s skilled personnel shall attend meetings related to Project progress, alleged delays, and time impact.

**B.** Contractor's Construction Schedule Updating: At monthly intervals, with Application for Payment, update schedule to reflect actual construction progress and activities. Issue schedule minimum of 48 hours before each regularly scheduled progress meeting. No payment will be processed without an approved construction schedule.

**1.** Revise schedule immediately after each meeting or other activity where revisions have been recognized or made. Issue updated schedule concurrently with the report of each such meeting within forty-eight (48) hours after such meeting.

**2.** Include a report with updated schedule that indicates every change, including, but not limited to, changes in logic, durations, actual starts and finishes, and activity durations.

**3.** As the Work progresses, indicate final completion percentage for each activity.

**C.** Distribution: Distribute copies of approved schedule to Engineer, Agency, separate contractors, testing and inspecting agencies, and other parties identified by Contractor with a need-to-know schedule responsibility.

**1.** Post copies in Project meeting rooms and temporary field offices.

2. When revisions are made, distribute updated schedules to the same parties and post in the same locations. Delete parties from distribution when they have completed their assigned portion of the Work and are no longer involved in performance of construction activities.

**END OF SECTION 01 32 00**

# SECTION 01 32 23

# SURVEYS AND LAYOUT DATA

## PART 1 - GENERAL

### 1.01 SUMMARY

**A.** The Contractor shall furnish all labor, equipment, materials, and incidentals necessary to perform surveys required to perform the Work as detailed in the Construction Drawings. The Work includes, but is not limited to, construction layout surveys, quality control surveys, partial payment surveys, and as-built surveys and drawings. Reference benchmarks and coordinates are provided on the construction drawings for reference.

### 1.02 RELATED SECTIONS

**A.** Section 01 20 00 - Measurement and Payment Procedures

**B.** Section 01 33 00 - Submittal Procedures

**C.** Section 01 35 43 - Environmental Protection

**D.** Section 01 77 00 – Closeout Procedures

### 1.03 SUBMITTALS

**A.** As-built surveys: Upon Project completion and before submitting the final Application for Payment, the Contractor shall submit to the Engineer drawings showing as-built conditions of the site. The as-builts will highlight any deviations to the Construction Drawings and shall include the following:

**1.** Field changes of dimension and detail;

**2.** Changes made by Change Order or other Modifications; and,

**3.** Details not on original Project Drawings.

## PART 2 - PRODUCTS (NOT APPLICABLE)

## PART 3 - EXECUTION

### 3.01 GENERAL

**A.** The Contractor shall complete the layout of the Work and shall be responsible for all final field measurements and connections; and,

**B.** The Contractor shall establish and maintain quality control for survey operations to assure compliance with contractual requirements and maintain records of its quality control for qualification of survey personnel, and the accuracy and completeness of required survey work.

### 3.02 PRE-CONSTRUCTION SURVEY

**A.** The Contractor must verify the location of all utilities prior (throughout the entire project length) to construction. The Contractor is strictly responsible for repair of any and all damages related to utilities as a result of this Project construction.

### 3.03 As-Built Survey

**A.** Final as-built surveys shall locate, by means of GPS coordinates, the centerline of the box culvert systems. Additionally, all invert elevations, both in and out of the double box culvert system shall be noted on the as-builts.

**END OF SECTION 01 32 23**

# SECTION 01 32 33

# PHOTOGRAPHIC DOCUMENTATION

## PART 1 - GENERAL

### 1.01 SUMMARY

**A.** This Section addresses the requirement to take and produce construction record photographs during the course of the Work.

**B.** Digital Photography is required. Film photography is not acceptable.

**C.** The employment of competent photographer to take construction record photographs periodically during course of the Work is required

### 1.02 RELATED DOCUMENTS

**A.** Section 01 29 00 – Payment Procedures

**B.** Section 01 33 00 – Submittal Procedures

**C.** Section 01 77 00 – Closeout Procedures

### 1.03 STILL PHOTOGRAPHY REQUIRED

**A.** Take a minimum of five (5) daily photographs of construction activities as necessary to document daily construction progress. The intent is for digital photos to be kept as a project record. Digitally record all existing conditions as demolition of the existing outfall structure is occurring – contractor should note that additional photo's may be required during this phase depending on conditions encountered. Digitally record all new box culvert coordinates prior to backfilling of same. Digitally record all construction progress as the box culvert system is being constructed and backfilled.

**B.** Digital photographs shall be submitted on suitable electronic media or uploaded to project site server at the Engineers option. Organization, cataloguing and files of pictures must be approved by Engineer.

**C.** Digital photographs shall be a resolution of ten (10) megapixels or greater.

**D.** Submitted digital media and photos become the property of Agency.

### 1.04 COSTS OF PHOTOGRAPHY

**A.** Contractor is responsible for the costs for specified photography and printing.

### 1.05 DELIVERY OF PHOTOS

**A.** Contractor will submit digital photos to the Engineer with monthly pay requests or within fifteen (15) days of photo date (whichever occurs sooner).

## PART 2 - PRODUCTS (NOT APPLICABLE)

## PART 3 - EXECUTION

### 3.01 TECHNIQUE

**A.** Presentation of Still Photography. The information/data provided with the digital still photography shall include:

**1.** Date of image;

**2.** Location of images corresponding to plan location.

**3.** Direction of image (N, S, E, W, NE, NW, SE, SW).

**B.** Exposure and Focus. The photography shall be taken with the appropriate exposure and focus.

**1.** Aerial Images and Aerial Videos:

a. Two final aerial views of the completed project will be chosen by the engineer from four (4) different positions (NE, SE, NW, SW). Two sets will be required to be professionally printed in color (size 24" x 32") and mounted on foam core for turnover to the owner.

**2.** Video imagery shall be at 1080p resolution with a shutter speed no slower than 30 frames/sec.

**3.** Video imagery shall use high quality lenses that produce clear and sharp images with a focal length that allows collected images to extend no more than 30 feet outside the construction zone. If a fixed lens is used, the height above sea level can be used to ensure that the cross section of the video does not exceed more than 30 feet outside the construction zone.

### 3.02 VIEWS REQUIRED

**A.** Photograph shall be taken from locations to adequately illustrate the condition of construction and the state of the Project.

### 3.03 PROJECT RECORD

**A.** Contractor shall submit a binder of stored CD/DVDs containing digital photos, for project records collated in chronological order of project with date headings for groups of photos or videos.

**B.** Contractor shall submit three copies of CD or DVD of all photos and videos, grouped by date and location.

**C.** Engineer will distribute, after review:

**1.** One copy of each view to Agency;

**2.** One copy of each view to Engineer's file; and

3. One copy of each view returned to Contractor for inclusion in Project Record Document.

**END OF SECTION 01 32 33**

# SECTION 01 33 00

# SUBMITTAL PROCEDURES

## PART 1 - GENERAL

### 1.01 SUMMARY

**A.** This Section includes requirements for the submittal schedule and administrative and procedural requirements for submitting Shop Drawings, Product Data Samples, and other submittals.

### 1.02 RELATED DOCUMENTS

**A.** 01 29 00 – Payment Procedures

**B.** 01 32 00 – Construction Progress Documentation

**C.** 01 40 00 – Contractor Quality Control

**D.** 01 77 00 – Closeout Procedures

### 1.03 SUBMITTALS

**A.** Submittal Schedule: The Contractor shall submit a schedule of submittals, arranged in chronological order by dates required by the construction schedule. Include time required for review, ordering, manufacturing, fabrication, and delivery when establishing dates. Include additional time required for making corrections or revisions to submittals noted by Engineer and additional time for handling and reviewing submittals required by those corrections.

### 1.04 QUALITY ASSURANCE

**A.** Coordination: The Contractor will coordinate preparation and processing of submittals with performance of construction activities.

**1.** Coordinate each submittal with fabrication, purchasing, testing, delivery, other submittals, and related activities that require sequential activity;

**2.** Submit submittal items required for each Specification Section concurrently;

**3.** Coordinate transmittal of different types of submittals for related parts of the Work so processing will not be delayed because of need to review submittals concurrently for coordination;

**a.** Engineer reserves the right to withhold action on a submittal requiring coordination with other submittals until related submittals are received;

**4.** Initial Review: Allow seven (7) working days for initial review of each submittal. Submittals which require coordination of subsequent submittals will not be reviewed until all pertinent submittals are provided;

5. Intermediate Review: If intermediate submittal is necessary, process it in same manner as initial submittal;
6. Resubmittal Review: Allow seven (7) working days upon Engineer's receipt of resubmittal for review of each resubmittal;
7. Assemble complete submittal package into a single indexed file incorporating submittal requirements of a single Specification Section and transmittal form; and,
8. Name file with submittal number or other unique identifier, including revision identifier – numbering system and identifiers will be mutually acceptable to the Contractor and MDMR.
9. Transmittal Form for Electronic Submittals shall be in color format and be fully searchable: Use electronic form, containing the following information:
    a. Project name;
    b. Date;
    c. Name and address of Engineer;
    d. Name of Contractor;
    e. Name of firm or entity that prepared submittal;
    f. Names of subcontractor, manufacturer, and supplier;
    g. Category and type of submittal;
    h. Revision number of submittal along with submittal dates of previous submittals;
    i. Submittal purpose and description;
    j. Specification Section number and title;
    k. Related physical samples submitted directly;
    l. Indication of full or partial submittal;
    m. Remarks;
    n. Identify options requiring selection by the Agency/Engineer; and
    o. Identify on separate page any clarification required by the Engineer and any deviations from the Contract Drawings and Contract Documents;
10. Furnish at least three (3) copies and one (1) searchable PDF copy of each submittal to the Engineer. Provide additional submittals if additional copies are needed for suppliers or subcontractors. Copies of the submittal will be retained for the Engineer (2), and Agency, with the remaining copies returned to the Contractor.

## PART 2 - PRODUCTS

## 2.01 MATERIAL SUBMITTAL PROCEDURES

**A.** Shop Drawings: The Contractor shall prepare Project-specific information, drawn accurately to scale. Do not base Shop Drawings on reproductions of the Contract Documents or standard printed data.

**1.** Preparation: Fully illustrate requirements in the Contract Documents. Include the following information, as applicable:

**a.** Identification of products;

**b.** Schedules;

**c.** Compliance with specified standards;

**d.** Notation of coordination requirements;

**e.** Notation of dimensions established by field measurement;

**f.** Relationship and attachment to adjoining construction clearly indicated; and

**g.** Seal and signature of professional engineer if specified.

**2.** Identify shop drawing details by reference to sheet and detail, or schedule shown on contract drawings.

**3.** Make drawings accurate to a scale with sufficient detail to show the kind, size, arrangement and function of component materials and devices.

**4.** Minimum sheet size is 8.5” X 11”.

**5.** Fabrication drawing size shall be 11” X 17” which shall be folded to 8.5” X 11” size.

**6.** If information must be specially prepared for submittal because standard published data are not suitable for use, submit as Shop Drawings, not as Product Data.

**7.** Mark each copy of each submittal to show which products and options are applicable.

**8.** Include the following information, as applicable:

**a.** Manufacturer's catalog cuts;

**b.** Standard color charts; and

**c.** Statement of compliance with specified referenced standards.

**9.** Submit Product Data before or concurrent with Samples.

**10.** Submit Product Data in the following format:

**a.** Electronically; and

**b.** Physical samples as necessary

**11.** Identification: Attach label on unexposed side of Samples that includes the following:

**a.** Generic description of Sample;

**b.** Product name and name of manufacturer;

**c.** Sample source;

**d.** Number and title of applicable Specification Section; and

**e.** Specification paragraph number and generic name of each item.

**12.** Provide corresponding electronic submittal of Sample transmittal, digital image file illustrating Sample characteristics, and identification information for record.

**13.** Disposition: Maintain sets of approved Samples at Project site, available for quality control comparisons throughout the course of construction activity. Sample sets may be used to determine final acceptance of construction associated with each set.

**a.** Samples that may be incorporated into the Work are indicated in individual Specification Sections. Such Samples must be in an undamaged condition at time of use; and,

**b.** Samples not incorporated into the Work, or otherwise designated as Agency's property, are the property of Contractor.

## 2.02 SCHEDULE OF VALUES SUBMITTAL

**A.** Contractor shall submit a Schedule of Values for all Lump Sum items in accordance with Specification 01 29 73 – SCHEDULE OF VALUES.

**B.** Approval of Schedule of Values must be approved by the Engineer/Agency prior to submittal of first payment request.

## 2.03 PAYMENT REQUEST

**A.** Three (3) paper copies and one (1) searchable PDF copy of each payment request must be submitted on the Application for Payment forms provided by or approved by the Agency.

**B.** Each payment request shall include the following:

**1.** Payment form provided by the Agency;

**2.** Updated Construction Schedule with updating report in accordance with Section 01 32 00 – CONSTRUCTION PROGRESS DOCUMENTATION;

**3.** Photographic Documentation in accordance with Section 01 32 33 –

PHOTOGRAPHIC DOCUMENTATION; and

## 2.04 OTHER SUBMITTALS

**A.** The Contractor shall also provide the following submittals:

**1.** Certificates of insurance;

**2.** Surety bonds;

**3.** List of proposed subcontractors;

**4.** List of proposed products;

**5.** Construction Progress Schedule;

**6.** Submittal register;

**7.** Health and safety plan;

**8.** Work plan;

**9.** Surveying Plan;

**10.** Quality control plan; and

**B.** Coordination Drawing Submittals: Comply with requirements specified in Section 01 31 00 –PROJECT MANAGEMENT AND COORDINATION.

**C.** Test and Inspection Reports and Schedule of Test and Inspection Submittals: Comply with requirements specified in Section 01 40 00 – CONTRACTOR QUALITY CONTROL.

**D.** Closeout Submittals: Comply with requirements specified in Section 01 77 00 – CLOSEOUT PROCEDURES.

**E.** Field Test Reports: Submit written reports indicating and interpreting results of field tests performed either during installation of product or after product is installed in its final location, for compliance with requirements in the Contract Documents.

# PART 3 - EXECUTION

## 3.01 CONTRACTOR'S REVIEW

**A.** Submittals: The Contractor shall review each submittal and check for coordination with other Work of the Contract and for compliance with the Contract Documents, note corrections and field dimensions, and mark with an approval stamp before submitting to Engineer.

**B.** Project Closeout and Maintenance Material Submittals: See requirements specified in Section 01 77 00 - CLOSEOUT PROCEDURES.

**C.** Approval Stamp: Prior to submitting submittals to Engineer and Agency, stamp each

submittal with the submittal stamp. Each submittal must include:

1. Project Name;
2. Submittal Number and Revision Number;
3. Specification Section; and
4. Contractor's approval and statement certifying that submittal has been reviewed and checked and approved for compliance with the Contract Documents. Incomplete submittals will be returned to the Contractor.

**D.** Submittal Log to be Maintained by Contractor:

1. Maintain an accurate submittal log for duration of the Work showing current status of all submissions;
2. Show submittal number, section number, section title, submittal description dates and disposition of submittal; and
3. Make submittal log available to Engineer for Engineer's review upon request.

## 3.02 ENGINEER'S DUTIES

**A.** The Engineer will review submittals in accord with approved submission schedule, provided that each submittal has been called for by the Contract Documents and is stamped by Contractor as indicated above.

1. No extensions of time are allowed due to Engineer's delay in reviewing submittals unless all the following criteria are met:
   - **a.** Contractor has notified Engineer in writing that timely review of particular submittal in question is critical to the progress of the Work and Contractor has identified the requested submittal return date;
   - **b.** Engineer has failed to return submittal within fourteen (14) working days of receipt of the submittal or receipt of said notice, whichever is later;
   - **c.** Contractor demonstrates that delay in progress of the Work was directly attributable to Engineer's failure to return submittal within fourteen (14) working days; and
   - **d.** Contractor demonstrates that submittal was submitted on schedule and that submittal review is on an item that is on the critical path as defined by the construction schedule provided in Section 01 32 00 – CONSTRUCTION PROGRESS DOCUMENTATION.
2. No extensions of time are allowed due to delays in progress of the Work caused by rejection and subsequent resubmission of data, including multiple resubmissions.

3. Engineer's review shall not extend to means, methods, techniques, sequences, operations of construction, and safety precautions and programs incidental thereto. No information regarding these items will be reviewed whether or not included in submittals.

4. In the event that Engineer will require more than fourteen (14) working days to perform review, Engineer shall so notify Contractor.

**B.** The Engineer will review drawings and data submitted only for general conformity with Contract Documents.

1. Engineer's review of drawings and data returned marked "No Exceptions Taken" or "Exceptions Noted" does not indicate a thorough review of all dimensions, quantities, and details of material, equipment device or items shown;

2. Engineer's review does not relieve Contractor of responsibility for errors, omissions or deviations nor responsibility for compliance with the Contract Documents;

3. The Engineer will consider and review only those deviations from the Contract Documents clearly identified as such on the submittal and tabulated on the Contractor's transmittal sheet.

**C.** The Engineer may return submittals unviewed to Contractor for distribution or for resubmission when:

1. The submittal was previously returned to the Contractor and no apparent changes have been made to the original submittal;

2. The submittal was provided by a subcontractor, supplier or manufacturer; or

3. The submittal is not required by the specific technical specification or contract documents.

**D.** The Engineer will affix a stamp and indicate the approval for submittal or resubmission requirements with the following stamp:

| | |
|---|---|
| ☐ NO EXCEPTIONS TAKEN | ☐ EXCEPTIONS NOTED |
| ☐ REVISE & RESUBMIT | ☐ REJECTED |

This review was performed only for general conformance with the design concept of the project and general compliance with the information given in the Contract Documents. Modifications or comments made on the shop drawings and product data during this review do not relieve Contractor from responsibility for compliance with the requirements of the plans and specifications. Contractor is responsible for: dimensions and quantities; information that pertains solely to the fabrication processes or to the means, methods, of construction; coordination of the work of all trades.

**Covington Civil and Environmental, LLC**

Date_____ By_____

## 3.03 DISPOSITION OF SHOP DRAWINGS AND PRODUCT DATA

**A.** "No Exceptions Taken": Approved with No Corrections Noted

**1.** One copy sent to Agency;

**2.** One copy sent to Program Manager;

**3.** One copy sent to Resident Project Representative;

**4.** One copy retained in Engineer's file;

**5.** Remaining copies returned to Contractor for his use;

a. One copy to be kept on file at Contractor's office at job site;

b. Remaining copies for Contractor's office file, suppliers, or subcontractors;

**6.** No corrections or comments noted on the submittal or on a Submittal Response Summary Sheet;

**7.** Issues or miscellaneous comments pertaining to other related items of the Work may be included in transmittal letter; and

**8.** Resubmission not required.

**B.** "Exceptions Noted": Approved with Corrections Noted:

**1.** One copy sent to Agency;

**2.** One copy sent to Program Manager;

**3.** One copy sent to Resident Project Representative;

**4.** One copy retained in Engineer's file;

5. Remaining copies returned to Contractor for his use; and
6. Comply with corrections or comments as noted on the submittal or on a Submittal Response Summary Sheet.
7. Resubmission not required.

**C.** "Revise and Resubmit": Incorrect information provided or Significant Information Still Required:

1. One copy sent to Program Manager;
2. One copy sent to Resident Project Representative;
3. One copy retained in Engineer's file;
4. All remaining copies returned to Contractor for revision and re-submittal;
5. Copy of transmittal letter and/or Submittal Response Summary Sheet sent to Agency. A "No Exceptions Taken" or "Exceptions Noted" submittal will be forwarded to Agency after review per above disposition requirements;
6. Submittal is either: incorrectly annotated; specific comments need to be addressed and incorporated in re-submittal; and/or additional information may be required as noted on the submittal or on a Submittal Response Summary Sheet;
7. Submitted information may not include or address specific item required per the specification as identified on the submittal or on a Submittal Response Summary Sheet;
8. Specific information related to identified item may be required for final approval of submittal; and
9. Resubmission of entire submittal may be required or resubmission of specific item may be required as identified on the submittal or on a Submittal Response Summary Sheet.

**D.** "Rejected": Returned for Correction:

1. One copy sent to Program Manager;
2. One copy sent to Resident Project Representative;
3. One copy retained in Engineer's file;
4. All remaining copies returned to Contractor;
5. Copy of transmittal letter and/or Submittal Response sent to Agency;
6. Contractor required to resubmit complete submittal package in accordance with Contract Documents;

7. Submittal does not comply with provisions of Contract Documents as noted on the submittal or on a Submittal Response Summary Sheet; and
8. Resubmission required.

## 3.04 DISPOSITION OF SAMPLES

**A.** "No Exceptions Taken": Approved with No Corrections Noted:

1. One sample sent to Agency;
2. One sample sent to Program Manager;
3. One sample sent to Resident Project Representative;
4. One sample retained in Engineer's file;
5. Acknowledgement: Copy of transmittal letter sent to Contractor; and
6. Resubmission not required.

**B.** "Exceptions Noted": Approved with Corrections Noted:

1. One sample sent to Agency;
2. One sample sent to Program Manager;
3. One sample sent to Resident Project Representative;
4. One sample retained in Engineer's file;
5. Acknowledgement: Copy of transmittal letter sent to Contractor;
6. Work performed or products furnished to comply with exceptions noted in acknowledgement; and
7. Resubmission not required.

**C.** "Rejected": Returned for Correction:

1. One sample retained in Engineer's file;
2. One sample sent to Program Manager;
3. Remaining samples sent to Contractor for resubmittal and compliance with the Contract Documents as noted in transmittal letter;
4. Copy of transmittal letter sent to Agency; and
5. Resubmission required.

**END OF SECTION 01 33 00**

# SECTION 01 35 29

# SAFETY AND OCCUPATIONAL HEALTH REQUIREMENTS

## PART 1 - GENERAL

### 1.01 REFERENCES

**A.** The publications listed below form a part of this specification to the extent referenced. The publications are referred to within the text by the basic designation only.

**1.** AMERICAN NATIONAL STANDARDS INSTITUTE (ANSI)

**2.** ANSI A10.32 Personal Fall Protection - Safety Requirements for Construction and Demolition Operations

**3.** ANSI Z359.1 (1992; R 1999) Safety Requirements for Personal Fall Arrest Systems, Subsystems and Components

**4.** ANSI/ASSE A10.34 (2001) Protection of the Public on or Adjacent to Construction Sites

**5.** ASME INTERNATIONAL (ASME)

**6.** ASME B30.22 (2005) Articulating Boom Cranes

**7.** ASME B30.5 (2004) Mobile and Locomotive Cranes

**8.** NFPA 10 (2002) Portable Fire Extinguishers

**9.** U.S. ARMY CORPS OF ENGINEERS (USACE)

**10.** EM 385-1-1 (2003) Safety -- Safety and Health Requirements

**11.** 29 CFR 1910.146 Permit-required Confined Spaces

**12.** 29 CFR 1926 Safety and Health Regulations for Construction

**13.** 29 CFR 1926.500 Fall Protection

### 1.02 SUBMITTALS

**A.** Preconstruction Submittals. Prior to construction commencing, the Contractor shall provide an Accident Prevention Plan (APP), Activity Hazard Analysis (AHA); Crane Critical Lift Plan; proof of qualification for Crane Operators and Test Reports.

**B.** Reports. Contractor shall submit reports as their incidence occurs, in accordance with the requirements of the paragraph entitled, “Reports,” including:

**1.** Accident Reports;

**2.** Monthly Exposure Reports;

**3.** Crane Reports;

4. Regulatory Citations and Violations SD-07 Certificates;
5. Confined Space Entry Permit; and
6. Current crane certifications

## 1.03 DEFINITIONS

**A.** High Visibility Accident. Any mishap which may generate publicity and/or high visibility.

**B.** Medical Treatment. Treatment administered by a physician or by registered professional personnel under the standing orders of a physician. Medical treatment does not include first aid treatment even through provided by physician or registered personnel.

**C.** Recordable Injuries or Illnesses. Any work-related injury or illness that results in:

1. Death, regardless of the time between the injury and death, or the length of the illness;
2. Days away from work (any time lost after day of injury/illness onset);
3. Restricted work;
4. Transfer to another job;
5. Medical treatment beyond first aid;
6. Loss of consciousness; or
7. A significant injury or illness diagnosed by a physician or other licensed health care professional, even if it did not result in (1) through (6) above.

## 1.04 REGULATORY REQUIREMENTS

**A.** In addition to the detailed requirements included in the provisions of this Contract, work performed shall comply with USACE EM 385-1-1, and the following federal, state, and local, laws, ordinances, criteria, rules and regulations. Submit matters of interpretation of standards to the appropriate administrative agency for resolution before starting work.

**B.** Where the requirements of this specification, applicable laws, criteria, ordinances, regulations, and referenced documents vary, the most stringent requirements shall apply. The safety manuals identified in this specification are to be considered minimum requirements. It is the responsibility of the Contractor to identify and comply with any and all safety regulations.

## 1.05 SITE QUALIFICATIONS, DUTIES AND MEETINGS

**A.** Personnel Qualifications

1. Competent Person

   a. Contractor shall provide a competent person for all work activities including confined space meeting the definition and requirements of EM 385-1-1.

2. Crane Operators

   b. At a minimum, crane operators shall meet the requirements in USACE EM 385-1-1, Section 16. In addition, for mobile cranes with Original Equipment Manufacturer (OEM) rated capacitates of 50,000 pounds or greater, crane operators shall be designated as qualified by a source that qualifies crane operators (i.e., union, a government agency, or an organization that tests and qualifies crane operators). Proof of current qualification shall be provided.

**B.** Personnel Duties

1. Superintendent, or designated competent person, shall:

   a. Conduct daily safety and health inspections and maintain a written log which includes area/operation inspected, date of inspection, identified hazards, recommended corrective actions, estimated and actual dates of corrections. Safety inspection logs shall be attached to the Contractors' daily quality control report.

   b. Conduct mishap investigations and complete required reports. Maintain the OSHA Form 300 and Daily Production reports for prime and sub-contractors.

   c. Maintain applicable safety reference material on the job site.

   d. Attend the pre-construction conference, pre-work meetings including preparatory inspection meeting, and periodic in-progress meetings.

   e. Implement and enforce accepted APPS and AHAs.

   f. Maintain a safety and health deficiency tracking system that monitors outstanding deficiencies until resolution. A list of unresolved safety and health deficiencies shall be posted on the safety bulletin board.

   g. Ensure sub-contractor compliance with safety and health requirements.

2. Failure to perform the above duties will result in dismissal of the superintendent and/or designated representative, and a project work stoppage. The project work stoppage will remain in effect pending approval of a suitable replacement.

**C.** Meetings

1. Preconstruction Conference

**a.** Contractor representatives who have a responsibility or significant role in accident prevention on the Project shall attend the preconstruction conference. This includes the project superintendent, designated competent person, quality control supervisor, or any other assigned safety and health professionals who participated in the development of the APP (including the Activity Hazard Analyses (AHAs) and special plans, program and procedures associated with it).

**b.** The Contractor shall discuss the details of the submitted APP to include incorporated plans, programs, procedures and a listing of anticipated AHAs that will be developed and implemented during the performance of the contract. This list of proposed AHAs will be reviewed at the conference and an agreement will be reached between the Contractor and MDMR as to which phases will require an analysis. In addition, a schedule for the preparation, submittal, review, and acceptance of AHAs shall be established to preclude project delays.

**c.** Deficiencies in the submitted APP will be brought to the attention of the Contractor at the preconstruction conference, and the Contractor shall revise the plan to correct deficiencies and re-submit it for acceptance. Work shall not begin until there is an accepted APP.

**2.** Safety Meetings

**a.** Shall be conducted and documented as required by EM 385-1-1. Minutes showing contract title, signatures of attendees and a list of topics discussed shall be attached to the Contractors' daily quality control report.

## 1.06 ACCIDENT PREVENTION PLAN (APP)

**A.** The Contractor shall use a qualified person to prepare the written site-specific APP. Prepare the APP in accordance with the format and requirements of USACE EM 385-1-1 and as supplemented herein. Cover all paragraph and subparagraph elements in USACE EM 385-1-1, Appendix A, "Minimum Basic Outline for Accident Prevention Plan". Specific requirements for some of the APP elements are described below. The APP shall be job-specific and shall address any unusual or unique aspects of the Project or activity for which it is written. The APP shall interface with the Contractor's overall safety and health program. Any portions of the Contractor's overall safety and health program referenced in the APP shall be included in the applicable APP element and made site-specific.

**B.** MDMR considers the Contractor to be the "controlling authority" for all work site safety and health of the subcontractors. Contractors are responsible for informing their subcontractors of the safety provisions under the terms of the Contract and the penalties

for noncompliance, coordinating the work to prevent one craft from interfering with or creating hazardous working conditions for other crafts, and inspecting subcontractor operations to ensure that accident prevention responsibilities are being carried out. The APP shall be signed by the person and firm (senior person) preparing the APP, the Contractor, the on-site superintendent, the designated site safety and health officer and any designated CSP and/or CIH.

**C.** Once accepted by Engineer, the APP and attachments will be enforced as part of the Contract. Disregarding the provisions of this Contract or the accepted APP will be cause for stopping of work, at the discretion of MDMR, until the matter has been rectified.

**D.** Once work begins, changes to the accepted APP shall be made with the knowledge and concurrence of MDMR, project superintendent, SSHO and quality control manager. Should any hazard become evident, stop work in the area, secure the area, and develop a plan to remove the hazard. Notify MDMR within 24 hours of discovery. Eliminate/remove the hazard. In the interim, all necessary action shall be taken to restore and maintain safe working conditions in order to safeguard onsite personnel, visitors, the public (as defined by ANSI/ASSE A10.34,) and the environment.

**E.** Copies of the accepted plan will be maintained at MDMR's Representative's office and at the job site. The APP shall be continuously reviewed and amended, as necessary, throughout the life of the Contract.

**F.** Unusual or high-hazard activities not identified in the original APP shall be incorporated in the plan as they are discovered.

**1.** EM 385-1-1 Contents

**a.** In addition to the requirements outlined in Appendix A of USACE EM 385-1-1, the following is required of the Contractor:

**1)** Names and qualifications (resumes including education, training, experience and certifications) of all site safety and health personnel designated to perform work on this Project to include the designated competent person, superintendent and any other qualified personnel. The duties of each position shall be specified.

**2)** Qualifications of competent and of qualified persons. As a minimum, competent persons shall be designated and qualifications submitted for each of the following major areas: excavation; scaffolding; fall protection; hazardous energy; confined space; health hazard recognition, evaluation and control of chemical, physical and biological agents; personal protective equipment and clothing to include selection, use and maintenance.

**3)** Confined Space Entry Plan. Develop a confined space entry plan in accordance with USACE EM 385-1-1, applicable OSHA standards 29 CFR 1910, 29 CFR 1915, and 29 CFR 1926, and any other federal, state and local regulatory requirements identified in this Contract. Identify the qualified person's name and qualifications, training, and experience. Delineate the qualified person's authority to direct work stoppage in the event of hazardous conditions. Include procedure for rescue by Contractor personnel and the coordination with emergency responders. (If there is no confined space work, include a statement that no confined space work exists and none will be created.)

**4)** Crane Critical Lift Plan. Prepare and sign weight handling critical lift plans for lifts over 75 percent of the capacity of the crane or hoist (or lifts over 50 percent of the capacity of a barge mounted mobile crane's hoists) at any radius of lift; lifts involving more than one crane or hoist; lifts of personnel; and lifts involving non-routine rigging or operation, sensitive equipment, or unusual safety risks.

**5)** The plan shall be submitted 15 calendar days prior to on-site work and include the requirements of USACE EM 385-1-1, paragraph 16.C.18. and the following:

a) For lifts of personnel, the plan shall demonstrate compliance with the requirements of 29 CFR 1926.550(g).

**6)** Fall Protection and Prevention (FP&P) Plan. The plan shall be site specific and address all fall hazards in the work place and during different phases of construction. It shall address how to protect and prevent workers from falling to lower levels when they are exposed to fall hazards above 1.8 m (6 feet). A qualified person for fall protection shall prepare and sign the plan. The plan shall include fall protection and prevention systems, equipment and methods employed for every phase of work, responsibilities, assisted rescue, self-rescue and evacuation procedures, training requirements, and monitoring methods. Fall Protection and Prevention Plan shall be revised every six months for lengthy projects, reflecting any changes during the course of construction due to changes in personnel, equipment, systems or work habits. The accepted Fall Protection and Prevention Plan shall be kept and maintained at the job site for the duration of the project. The Fall Protection and Prevention Plan shall be included in the Accident Prevention Plan (APP).

## 1.07 ACTIVITY HAZARD ANALYSIS (AHA)

**A.** The Activity Hazard Analysis (AHA) format shall be in accordance with USACE EM 385-1-1. Submit the AHA for review at least 15 calendar days prior to the start of each phase. Format subsequent AHAs as amendments to the APP. The analysis should be used during daily inspections to ensure the implementation and effectiveness of the activity's safety and health controls.

**B.** The AHA list will be reviewed periodically (at least monthly) at the Contractor supervisory safety meeting and updated as necessary when procedures, scheduling, or hazards change.

**C.** The activity hazard analyses shall be developed using the project schedule as the basis for the activities performed. Any activities listed on the project schedule will require an AHA. The AHAs will be developed by the Contractor, its suppliers or subcontractors and provided to MDMR.

## 1.08 SITE SAFETY REFERENCE MATERIALS

**A.** Maintain safety-related references applicable to the project, including those listed in the article "References." Maintain applicable equipment manufacturer's manuals.

## 1.09 EMERGENCY MEDICAL TREATMENT

**A.** Contractors will arrange for their own emergency medical treatment. MDMR has no responsibility to provide emergency medical treatment.

## 1.10 REPORTS

**A.** Accident Reports

**1.** For recordable injuries and illnesses, and property damage accidents resulting in at least $2,000 in damages, the Prime Contractor shall conduct an accident investigation to establish the root cause(s) of the accident, within 5 calendar days of the accident.

**B.** Accident Notification

**1.** Notify MDMR as soon as practical, but not later than 30 minutes, after any accident meeting the definition of Recordable Injuries or Illnesses or High Visibility Accidents, property damage equal to or greater than $2,000, or any weight handling equipment accident.

**2.** Information shall include contractor name; contract title; type of contract; name of activity, installation or location where accident occurred; date and time of accident; names of personnel injured; extent of property damage, if any; extent of injury, if known, and brief description of accident (to include type of construction equipment used, PPE used, etc.). Preserve the conditions and evidence on the accident site

until the MDMR investigation team arrives on-site and an investigation is conducted.

**C.** Crane Reports

**1.** Submit crane inspection reports required in accordance with USACE EM 385-1-1 and as specified herein with Daily Reports of Inspections.

## 1.11 HOT WORK

A. The Contractor will provide at least two (2) twenty (20) pound 4A:20 BC rated extinguishers for normal "Hot Work". All extinguishers shall be current inspection tagged, approved safety pin and tamper resistant seal. It is also mandatory to have a designated FIRE WATCH for any "Hot Work" done at this activity.

B. When starting work in the facility, Contractor shall require its personnel to familiarize themselves with the location of the nearest fire extinguishers and place in memory the emergency fire department phone number.

C. Obtain services from a NFPA Certified Marine Chemist for "HOT WORK" within or around flammable materials (such as fuel systems, welding/cutting on fuel pipes) or confined spaces (such as sewer wet wells, manholes, vaults, etc.) that have the potential for flammable or explosive atmospheres, if required.

# PART 2 - PRODUCTS (NOT APPLICABLE)

# PART 3 - EXECUTION

## 3.01 CONSTRUCTION AND/OR OTHER WORK

**A.** The Contractor shall comply with USACE EM 385-1-1, NFPA 241, the APP, the AHA, Federal and/or State OSHA regulations, and other related submittals and activity fire and safety regulations. The most stringent standard shall prevail.

**1.** Corps of Engineers Safety and Health Requirements Manual. All Contractors must comply with the Corps of Engineers Safety and Health Requirements Manual, EM-385-1-1 in effect on date of solicitation.

**2.** Hazardous Material Exclusions

**a.** Notwithstanding any other hazardous material used in this contract, radioactive materials or instruments capable of producing ionizing/non-ionizing radiation (with the exception of radioactive material and devices used in accordance with USACE EM 385-1-1 such as nuclear density meters for compaction testing and laboratory equipment with radioactive sources) as well as materials which contain asbestos, mercury or polychlorinated biphenyls, di-isocyanates, lead-based paint are prohibited. MDMR, upon written request by the Contractor, may consider exceptions to the use of any of the above excluded materials.

## 3.02 FALL HAZARD PROTECTION AND PREVENTION PROGRAM

**A.** The Contractor shall establish a fall protection and prevention program, for the protection of all employees exposed to fall hazards. The program shall include company policy, identify responsibilities, education and training requirements, fall hazard identification, prevention and control measures, inspection, storage, care and maintenance of fall protection equipment and rescue and evacuation procedures.

**1.** Training

**a.** The Contractor shall institute a fall protection training program. As part of the Fall Hazard Protection and Prevention Program, the Contractor shall provide training for each employee who might be exposed to fall hazards. A competent person for fall protection shall provide the training. Training requirements shall be in accordance with USACE EM 385-1-1, section 21.A.16.

**2.** Fall Protection Equipment and Systems

**a.** The Contractor shall enforce use of the fall protection equipment and systems designated for each specific work activity in the Fall Protection and Prevention Plan and/or AHA at all times when an employee is exposed to a fall hazard. Employees shall be protected from fall hazards as specified in EM 385-1-1, Section 21. In addition to the required fall protection systems, safety skiff, personal floatation devices, life rings etc., are required when working above or next to water in accordance with USACE EM 385-1-1, Paragraphs 05.H. and 05.I. Personal fall arrest systems are required when working from an articulating or extendible boom, swing stages, or suspended platform. In addition, personal fall arrest systems are required when operating other equipment such as scissor lifts if the work platform is capable of being positioned outside the wheelbase. The need for tying-off in such equipment is to prevent ejection of the employee from the equipment during raising, lowering, or travel. Fall protection must comply with 29 CFR 1926.500, Subpart M, USACE EM 385-1-1 and ANSI A10.32.

**b.** Personal Fall Arrest Equipment

1) Personal fall arrest equipment, systems, subsystems, and components shall meet ANSI Z359.1. Only a full-body harness with a shock-absorbing lanyard or self-retracting lanyard is an acceptable personal fall arrest body support device. Body belts may only be used as a positioning device system (for uses such as steel reinforcing assembly and in addition to an approved fall arrest system). Harnesses shall have a fall arrest attachment affixed to the body support (usually a Dorsal D-ring) and specifically designated for attachment to the rest of the system. Only locking snap hooks and

carabiners shall be used. Webbing, straps, and ropes shall be made of synthetic fiber. The maximum free fall distance when using fall arrest equipment shall not exceed 1.8 m (6 feet). The total fall distance and any swinging of the worker (pendulum-like motion) that can occur during a fall shall always be taken into consideration when attaching a person to a fall arrest system.

**3.** Horizontal Lifelines

**a.** Horizontal lifelines shall be designed, installed, certified and used under the supervision of a qualified person for fall protection as part of a complete fall arrest system which maintains a safety factor of 2 (29 CFR 1926.500).

**4.** Guardrails and Safety Nets

**a.** Guardrails and safety nets shall be designed, installed and used in accordance with EM 385-1-1 and 29 CFR 1926 Subpart M.

**5.** Rescue and Evacuation Procedures

**a.** When personal fall arrest systems are used, the contractor must ensure that the mishap victim can self-rescue or can be rescued promptly should a fall occur. A Rescue and Evacuation Plan shall be prepared by the contractor and include a detailed discussion of the following: methods of rescue; methods of self-rescue; equipment used; training requirement; specialized training for the rescuers; procedures for requesting rescue and medical assistance; and transportation routes to a medical facility. The Rescue and Evacuation Plan shall be included in the Activity Hazard Analysis (AHA) for the phase of work, in the Fall Protection and Prevention (FP&P) Plan, and the Accident Prevention Plan (APP).

## 3.03 EQUIPMENT

**A.** Material Handling Equipment

**1.** Material handling equipment such as forklifts shall not be modified with work platform attachments for supporting employees unless specifically delineated in the manufacturer's printed operating instructions.

**2.** The use of hooks on equipment for lifting of material must be in accordance with manufacturer's printed instructions.

**3.** Operators of forklifts or power industrial trucks shall be licensed in accordance with OSHA.

**B.** Weight Handling Equipment

**1.** Cranes and derricks shall be equipped as specified in EM 385-1-1, section 16.

2. The Contractor shall comply with the crane manufacturer's specifications and limitations for erection and operation of cranes and hoists used in support of the work. Erection shall be performed under the supervision of a designated person (as defined in ASME B30.5). All testing shall be performed in accordance with the manufacturer's recommended procedures.
3. The Contractor shall comply with ASME B30.5 for mobile and locomotive cranes, ASME B30.22 for articulating boom cranes, ASME B30.3 for construction tower cranes, and ASME B30.8 for floating cranes and floating derricks.
4. Under no circumstance shall a Contractor make a lift at or above 90% of the cranes rated capacity in any configuration.
5. When operating in the vicinity of overhead transmission lines, operators and riggers shall be alert to this special hazard and shall follow the requirements of USACE EM 385-1-1 section 11 and ASME B30.5 or ASME B30.22 as applicable.
6. Crane suspended personnel work platforms (baskets) shall not be used unless the Contractor proves that using any other access to the work location would provide a greater hazard to the workers or is impossible. Personnel shall not be lifted with a line hoist or friction crane.
7. Portable fire extinguishers shall be inspected, maintained, and recharged as specified in NFPA 10, Standard for Portable Fire Extinguishers.
8. All employees shall be kept clear of loads about to be lifted and of suspended loads.
9. The Contractor shall use cribbing when performing lifts on outriggers.
10. The crane hook/block must be positioned directly over the load. Side loading of the crane is prohibited.
11. A physical barricade must be positioned to prevent personnel from entering the counterweight swing (tail swing) area of the crane.
12. Certification records which include the date of inspection, signature of the person performing the inspection, and the serial number or other identifier of the crane that was inspected shall always be available for review by MDMR.
13. Written reports listing the load test procedures used along with any repairs or alterations performed on the crane shall be available for review by MDMR personnel.
14. Certify that all crane operators have been trained in proper use of all safety devices (e.g. anti-two block devices).
15. Equipment and Mechanized Equipment

**16.** Proof of qualifications for operator shall be kept at the Project site for review.

**17.** Manufacture specifications or owner's manual for the equipment shall be on-site and reviewed for additional safety precautions or requirements that are sometimes not identified by OSHA or USACE EM 385-1-1. Such additional safety precautions or requirements shall be incorporated into the AHAs.

## 3.04 EXCAVATIONS

**A.** The competent person shall perform soil classification in accordance with 29 CFR 1926.

**1.** Utility Locations

**a.** Prior to digging, the appropriate digging permit must be obtained. All underground utilities in the work area must be positively identified by a private utility locating service in addition to any station locating service and coordinated with the station utility department. Any markings made during the utility investigation must be maintained throughout the contract.

**2.** Utility Location Verification

**a.** The Contractor must physically verify underground utility locations by hand digging using wood or fiberglass handled tools when any adjacent construction work is expected to come within three feet of the underground system. Digging within 0.061 m (2 feet) of a known utility must not be performed by means of mechanical equipment; hand digging shall be used. If construction is parallel to an existing utility the utility shall be exposed by hand digging every 30.5 m (100 feet) if parallel within 1.5 m (5 feet) of the excavation.

## 3.05 ELECTRICAL

**A.** Conduct of Electrical Work

**1.** Plan so that work near energized parts is minimized to the fullest extent possible. Use of electrical outages clear of any energized electrical sources is the preferred method. When work requires Contractor to work near energized circuits as defined by the NFPA 70, high voltage personnel must use personal protective equipment that includes, as a minimum, electrical hard hat, safety shoes, insulating gloves with leather protective sleeves, fire retarding shirts, coveralls, face shields, and safety glasses. In addition, provide electrical arc flash protection for personnel as required by NFPA 70E. Insulating blankets, hearing protection, and switching suits may also be required, depending on the specific job and as delineated in the Contractor's AHA.

**B.** Portable Extension Cords

1. Portable extension cords shall be sized in accordance with manufacturer ratings for the tool to be powered and protected from damage. All damaged extension cords shall be immediately removed from service. Portable extension cords shall meet the requirements of NFPA 70.

## 3.06 WORK IN CONFINED SPACES

**A.** The Contractor shall comply with the requirements in Section 06.I of USACE EM 385-1-1, OSHA 29 CFR 1910.146 and OSHA 29 CFR 1926.21(b)(6). Any potential for a hazard in the confined space requires a permit system to be used. The entry and monitoring procedures shall include:

1. Prohibit entry into a confined space by personnel for any purpose, including hot work, until the qualified person has conducted appropriate tests to ensure the confined or enclosed space is safe for the work intended and that all potential hazards are controlled or eliminated and documented. (See Section 06.I.06 of USACE EM 385-1-1 for entry procedures.) All hazards pertaining to the space shall be reviewed with each employee during review of the AHA.
2. Forced air ventilation is required for all confined space entry operations and the minimum air exchange requirements must be maintained to ensure exposure to any hazardous atmosphere is kept below its' action level.
3. Sewer wet wells require continuous atmosphere monitoring with audible alarm for toxic gas detection.

**END OF SECTION 01 35 29**

# SECTION 01 35 43

# ENVIRONMENTAL PROTECTION

## PART 1 - GENERAL

### 1.01 SUMMARY

**A.** This Section covers prevention of environmental pollution and damage as the result of construction operations under this Contract and for those measures set forth in other technical requirements of the Contract Specifications. For the purpose of this Specification, environmental pollution and damage are defined as the presence of chemical, physical, or biological elements or agents, which adversely affect human health or welfare; unfavorably alter ecological balances of importance to human life; affect other species of importance to man; or degrade the utility of the environment for aesthetic, cultural, and/or historical purposes. The control of environmental pollution and damage requires consideration of air, water, and land, and includes management of visual aesthetics, noise, solid waste, radiant energy and radioactive materials, as well as other pollutants.

**B.** Contractor shall establish and maintain quality control for environmental protection of all items set forth herein. Contractor shall record on daily quality control reports or attachments thereto, any problems in complying with laws, regulations and ordinances, and corrective actions taken.

### 1.02 RELATED SECTIONS:

**A.** Section 01 20 00 - Measurement and Payment Procedures

**B.** Section 01 29 00 – Payment Procedures

**C.** Section 01 32 00 - Construction Progress Documentation

**D.** Section 01 33 00 - Submittal Procedures

**E.** Section 01 40 00 - Contractor Quality Control

### 1.03 SUBMITTALS

**A.** The following submittals shall be submitted by the Contractor in accordance with **SECTION 01 33 00 SUBMITTAL PROCEDURES**.

**1.** Environmental Protection Plan - After the contract is awarded, prior to the commencement of the work, the Contractor shall meet with the Engineer, or his representative, and discuss the proposed environmental protection plan. The meeting shall develop mutual understanding relative to details of environmental protection, including required reports and measures to be taken should the Contractor fail to provide adequate protection in an adequate and timely manner.

Not more than fourteen (14) days after the meeting, the Contractor shall submit for approval his proposed environmental protection plan.

**2.** SWPPP and SCNOI - Contractor shall prepare and submit to Engineer a SWPPP and SCNOI in accordance with MDEQ standards for the project.

## 1.04 SUBCONTRACTORS

**A.** Assurance of compliance with this section by subcontractors will be the responsibility of Contractor.

## 1.05 TRAINING OF CONTRACTOR PERSONNEL IN POLLUTION CONTROL

A. Contractor shall train his personnel in all phases of environmental protection. The training shall include methods of detecting and avoiding pollution, familiarization with pollution standards, both statutory and contractual, and installation and care of facilities to insure adequate and continuous environmental pollution control. Quality Control and supervisory personnel shall be thoroughly trained in the proper use of monitoring devices and abatement equipment, and shall be thoroughly knowledgeable of federal, state, and local laws, regulations, and permits as listed in the EPP submitted by Contractor. Quality Control personnel will be identified in the Quality Control Plan submitted in accordance with **SECTION 01 40 00 - CONTRACTOR QUALITY CONTROL**.

## 1.06 NONCOMPLIANCE

**B.** The Engineer or CQC System Manager will notify the Contractor of any observed noncompliance. The Contractor shall, after receipt of such notice, inform the Engineer of proposed corrective action and take such action as may be approved. Corrective actions shall be in compliance with the aforementioned federal, state, or local laws or regulations, permits and other elements of the Contractor's EPP. If the Contractor fails to comply promptly, the Engineer may issue an order stopping all or part of the Work until satisfactory corrective action has been taken. No time extensions shall be granted or costs or damages allowed to the Contractor for any such suspension.

**C.** Monitoring of permit and/or regulation compliance by the Engineer is for the sole benefit of the Agency and shall not relieve the Contractor of the responsibility of knowing and complying with all local, state, and federal laws and regulations concerning the protection of environmental resources, nor does it relieve the Contractor of the responsibility of ensuring that all environmental permit requirements governing the project work are met.

**D.** The Contractor shall notify the Engineer immediately, in writing, of the occurrence of environmental incidents and also include in the Daily Progress Report in accordance with **SECTION 01 32 00 CONSTRUCTION PROGRESS DOCUMENTATION.**

## PART 2 - PART 2 - PRODUCTS (NOT APPLICABLE)

## PART 3 - PART 3 - EXECUTION

### 3.01 PROTECTION OF ENVIRONMENTAL RESOURCES

**A.** General - For Contract work, the Contractor shall comply with all applicable federal, state, and local laws and regulations. The environmental resources within the project boundaries and those affected outside the limits of permanent work under this Contract shall be protected during the entire period of this Contract. Contractor shall confine his activities to areas defined by the Drawings and Specifications. Environmental protection shall be as stated in the following paragraphs. Failure to meet the requirements of these Specifications for environmental protection may result in Work stoppages or termination for default. No part of the time lost due to any such Work stoppages shall be made the subject of claims for extensions of time or for excess costs or damages by Contractor. If Contractor fails or refuses to promptly repair any damage caused by violation of provisions of the Contract Documents, the Agency may have the necessary Work performed and charge the cost thereof to Contractor.

### 3.02 PRESERVATION AND RECOVERY OF HISTORIC, ARCHEOLOGICAL, AND CULTURAL RESOURCES

**A.** Inadvertent Discoveries - If, during construction activities, Contractor observes items that may have historic or archeological value, such observations shall be reported immediately to Engineer so that the appropriate authorities may be notified and a determination made as to their significance and what, if any, special disposition of the finds should be made. Contractor shall cease all activities that may result in the destruction of these resources and shall prevent his employees from trespassing on, removing, or otherwise damaging such resources.

**B.** Claims for Downtime due to Inadvertent Discoveries - Upon discovery and subsequent reporting of a possible inadvertent discovery of cultural resources, the Contractor shall seek to continue work well away from, or otherwise protectively avoiding, the area of interest, or in some other manner that strives to continue productive activities in keeping with the Contract. Should an inadvertent discovery be of the nature that substantial impact(s) to the work schedule are evident; such delays shall be coordinated with the Engineer.

### 3.03 PROTECTION OF WETLANDS

**A.** The Contractor shall protect all wetland adjacent to the work area from his operations. There shall be no storage of tools or materials within wetlands, along the shoreline in the littoral zone, or elsewhere within waters of the state except as specified in the project Specifications and/or Drawings.

## 3.04 PROTECTION OF LAND RESOURCES

**A.** Before beginning any construction, Contractor shall identify all land resources to be preserved within Contractor's work area. Contractor shall not remove, cut, deface, injure, or destroy land resources including trees, shrubs, vines, grasses, topsoil, and landforms outside of the clearing limits specified in the Drawings and Specifications without special permission from Engineer. No ropes, cables, or guys shall be fastened to or attached to any trees for anchorage unless specifically authorized. Contractor shall provide effective protection for land and vegetation resources at all times as defined in the following paragraphs.

**B.** Monuments and markers shall be protected before construction operations commence. Where construction operations are to be conducted during darkness, the markers shall be visible. The Contractor shall convey to his personnel the purpose of marking and/or protection of all necessary objects.

**C.** Solid wastes (excluding clearing debris) shall be placed in containers that are emptied on a regular schedule. All handling and disposal shall be conducted to prevent contamination. The Contractor shall transport all solid waste off the properties within the project limits and dispose of it in compliance with federal, state, and local requirements for solid waste disposal. Discarded materials other than those that can be handled in the solid waste category will be handled as directed by the Engineer.

**D.** Fuel dispensers shall have a 4-foot square, 16-gauge metal pan with borders banded up and welded at corners right below the bib. Edges of the pans shall be 8-inch minimum in depth to ascertain that no contamination of the ground or water takes place. Pans shall be cleaned by an approved method immediately after every dispensing of fuel and wastes disposed of offsite in an approved area. Contractor shall select and implement controls and procedures to minimize leaking or spilling of fuels during fueling of vehicles or equipment. Should any spilling of fuel occur the Contractor shall immediately recover the contaminated ground and/or water and dispose of it offsite in an approved area.

**E.** Chemical waste shall be stored in corrosion resistant containers, removed from the work area and disposed of in accordance with Federal, state, and local regulations.

**F.** Discarded materials other than those that can be included in the solid waste category shall be handled as directed.

## 3.05 PROTECTION OF WATER RESOURCES

**A.** The Contractor shall keep construction activities under surveillance, management, and control to avoid pollution of surface and groundwaters. The Contractor shall conduct his operations in a manner to minimize erosion and turbidity, and shall conform to all

water quality standards as required by the permits and all other relevant Federal, State and local regulatory criteria. Special management techniques as set out below shall be implemented to control water pollution by the listed construction activities that are included in this Contract. In the event of unforeseen conditions, the Engineer may require the use of control features or methods other than those indicated or proposed by the Contractor.

**B.** No creosote material shall be used in construction.

**C.** No construction debris, refuse, or unauthorized fill material shall be allowed to enter coastal wetlands or waters.

**D.** Oil and Fuel Spill Prevention

**1.** Contractor will prevent oil or other hazardous substances from entering the ground, drainage, or local bodies of water. Contractor will provide containment, diversionary structures, or equipment to prevent discharged oil from reaching a watercourse. Contractor will take immediate action to contain and clean up any spill of oily substances, petroleum products, and hazardous substances. Contractor will immediately report such spills to the Engineer. Contractor will provide one or more of the following preventive systems at each oil storage site. The provision of such preventive systems shall be approved by the Engineer prior to tank installation and use.

**a.** Dikes, berms, retaining walls, culverts, curbs, gutters, or other similar structures shall be capable of containing the contents of the largest single tank.

**b.** Absorbent materials shall be capable of absorbing the contents of the largest single tank.

**2.** Oil or Fuel Storage Tank Installation: All storage tank installation shall be constructed so that a secondary means of containment is provided for the entire contents of the tanks installed. Dikes and other structures shall be positioned or located so as to provide a secondary containment identical to that required for non-mobile storage tanks. Storage tanks shall be located where they will not be subject to flooding or washout. When it is determined that the installation of containment structures or equipment to prevent discharged oil from reaching a watercourse is not practicable, a clear demonstration of such impracticability shall be submitted to the Engineer for approval prior to installation or use of the storage tank. The following shall also be provided to the Engineer for approval prior to installation use of the storage tank:

**a.** An oil spill contingency plan, either contained within or separate from the EPP.

**b.** A written certification of commitment of manpower, equipment, and materials required to expeditiously control and remove the discharge oil.

**3.** Liabilities: Contractor shall be liable for the damage caused by oil or fuel spills when it can be shown that the oil or fuel was discharged as a result of negligence or willful misconduct. The penalty for failure to report the discharge of oil or fuel shall be in accordance with state and federal laws.

## 3.06 PROTECTION OF FISH AND WILDLIFE RESOURCES

**A.** Contractor shall keep construction activities under surveillance, management, and control to minimize interference with, disturbance to, and damage of fish, shellfish beds, migratory birds and nests and wildlife.

**B.** In the event that a threatened or endangered species is harmed because of construction activities, the Contractor shall cease all work and notify the Engineer. The Engineer will provide emergency contact information at the Pre-Construction Meeting.

**C.** Any collision with and/or injury to a sea turtle or smalltooth sawfish shall be reported immediately to the National Marine Fisheries Service's Protected Resources Division (727-824-5312) and the local authorized sea turtle stranding/rescue organization at 1-888-806-1674.

## 3.07 PROTECTION OF AIR RESOURCES

**A.** The Contractor shall keep construction activities under surveillance, management, and control to minimize pollution of air resources. All activities, equipment, processes and work operated or performed by the Contractor in accomplishing the specified construction shall be in strict accordance with the applicable air pollution standards of the State of Mississippi and all Federal emission and performance laws and standards.

**B.** Dust Control: Keep dust down at all times, including during nonworking periods. Sprinkle or treat, with dust suppressants, the soil at any staging areas, haul roads, and other areas disturbed by operations. Strictly adhere to applicable environmental regulations for dust prevention.

**C.** Contractor will minimize air pollution from the construction activities.

**1.** Burning of waste materials, rubbish, or other debris will not be permitted on or adjacent to the Site.

**2.** Tanks and containers of fuels and related products shall be controlled to minimize the emission of volatile organic compounds.

## 3.08 PROTECTION FROM SOUND INTRUSIONS

**A.** The Contractor shall keep construction activities under surveillance and control to minimize damage to the environment by noise and to comply with all federal, state,

and local noise ordinances. The use of horns, bells or the use of whistle signals shall be held to a minimum necessary in order to ensure as safe and as quiet an operation as possible.

## 3.09 CONSTRUCTION CLEANUP

**A.** The Contractor shall clean up any area(s) used for construction daily to the satisfaction of the Engineer and Agency.

## 3.10 MAINTENANCE OF POLLUTION CONTROL FACILITIES

**A.** The Contractor shall, at his expense, provide routine maintenance of permanent and temporary erosion control features until the Project is completed and accepted. If such erosion control features must be reconstructed due to the Contractor's negligence, carelessness, or in the case of temporary erosion control features, failure by the Contractor to install permanent erosion control features as scheduled, such replacement shall be on the Contractor's expense.

**B.** If the Contractor through any construction activity degrades, destroys, or impacts the ground cover on any adjoining property including rights-of-way, effected area shall be fully repaired and re-vegetated at the Contractor's expense.

## 3.11 REPAIR OR RESTORATION:

**A.** All dunes or other landscape features scarred or damaged by the Contractor's equipment or operations shall be repaired and/or restored to their original condition at the Contractor's expense. The Engineer shall approve the repair and/or restoration prior to its initiation.

**B.** Temporary Construction: The Contractor shall obliterate all signs of temporary construction facilities such as haul roads, work areas, structures, foundations of temporary structures, stockpiles of excess or waste materials, and all other vestiges of construction. Temporary roads, parking areas and similar temporary use areas shall be graded in conformance with surrounding areas.

**END OF SECTION 01 35 43**

# SECTION 01 40 00

# CONTRACTOR QUALITY CONTROL

## PART 1 - GENERAL

### 1.01 PAYMENT

**A.** Separate payment will not be made for providing and maintaining an effective Quality Control program, and all costs associated therewith shall be included in the applicable unit prices or lump-sum prices contained in the Bid Form.

### 1.02 RELATED SECTIONS

**A.** 01 20 00 – Measurement and Payment Procedures

**B.** 01 31 00 – Project Management and Coordination

**C.** 01 32 00 – Construction Progress Documentation

**D.** 01 33 00 – Submittal Procedures

**E.** 01 77 00 – Closeout Procedures

### 1.03 SUBMITTALS

**A.** The following submittals shall be submitted by the Contractor in accordance with SECTION 01 33 00 – SUBMITTAL PROCEDURES.

**1.** Quality Control Plan - Within twenty (20) calendar days of Notice of Award, the Contractor shall submit the draft Contractor Quality Control (CQC) Plan for review and acceptance by the Engineer prior to the coordination meeting. The Contractor shall furnish, no later than ten (10) calendar days after receipt of the Notice to Proceed, an acceptable final CQC Plan. The plan shall identify personnel, procedures, control, instructions, tests, records, and forms to be used.

## PART 2 - PRODUCTS (NOT APPLICABLE)

## PART 3 - EXECUTION

### 3.01 GENERAL REQUIREMENTS

**A.** The Contractor is responsible for quality control and shall establish and maintain an effective quality control system in compliance with these specifications. The quality control system shall consist of plans, procedures, and organization necessary to produce an end product which complies with the contract requirements. The system shall cover all construction operations, both onsite and offsite, and shall be keyed to the proposed construction sequence. The Project site superintendent will be held responsible for the quality of work on the job and is subject to removal by MDMR for non-compliance with the quality requirements specified in the contract. The Project site superintendent

in this context shall be the highest level manager responsible for the overall construction activities at the site, including quality and production. The Project site superintendent shall maintain a physical presence at the site at all times, except as otherwise acceptable to MDMR and shall be responsible for all construction and construction related activities at the site.

## 3.02 QUALITY CONTROL PLAN

**A.** The Contractor shall furnish for review by Engineer, not later than 10 days after receipt of notice to proceed, the Contractor Quality Control (CQC) Plan. The plan shall identify personnel, procedures, control, instructions, tests, records, and forms to be used. MDMR will consider an interim plan for the first 30 days of operation. Construction will be permitted to begin only after acceptance of the CQC Plan or acceptance of an interim plan applicable to the particular feature of work to be started. Work outside of the features of work included in an accepted interim plan will not be permitted to begin until acceptance of a CQC Plan or another interim plan containing the additional features of work to be started.

**1.** Content of the CQC Plan

**a.** The CQC Plan shall include, as a minimum, the following to cover all construction operations, both onsite and offsite, including work by subcontractors, fabricators, suppliers, and purchasing agents:

**b.** A description of the quality control organization, including a chart showing lines of authority and acknowledgment that the CQC staff shall implement the three phase control system for all aspects of the work specified. The staff shall include a CQC System Manager who shall report to the Project superintendent.

**c.** The name, qualifications (in resume format), duties, responsibilities, and authorities of each person assigned a CQC function.

**d.** A copy of the letter to the CQC System Manager signed by an authorized official of the firm which describes the responsibilities and delegates sufficient authorities to adequately perform the functions of the CQC System Manager, including authority to stop work which is not in compliance with the Contract. The CQC System Manager shall issue letters of direction to all other various quality control representatives outlining duties, authorities, and responsibilities. Copies of these letters shall also be furnished to MDMR.

**e.** Procedures for scheduling, reviewing, certifying, and managing submittals, including those of subcontractors, offsite fabricators, suppliers, and purchasing agents. These procedures shall be in accordance with Section 01 33 00 SUBMITTAL PROCEDURES.

**f.** Control, verification, and acceptance testing procedures for each specific test to include the test name, specification paragraph requiring test, feature of work to be tested, test frequency, and person responsible for each test. (Laboratory facilities approved by MDMR shall be used.)

**g.** Procedures for tracking preparatory, initial, and follow-up control phases and control, verification, and acceptance tests including documentation.

**h.** Procedures for tracking construction deficiencies from identification through acceptable corrective action. These procedures shall establish verification that identified deficiencies have been corrected.

**i.** Reporting procedures, including proposed reporting formats.

**j.** A list of the definable features of work. A definable feature of work is a task which is separate and distinct from other tasks, has separate control requirements, and may be identified by different trades or disciplines, or it may be work by the same trade in a different environment. Although each section of the specifications may generally be considered as a definable feature of work, there are frequently more than one definable features under a particular section. This list will be agreed upon during the coordination meeting.

**2.** Acceptance of Plan

**a.** Acceptance of the Contractor's plan is required prior to the start of construction. Acceptance is conditional and will be predicated on satisfactory performance during the construction. MDMR reserves the right to require the Contractor to make changes in his CQC Plan and operations including removal of personnel, as necessary, to obtain the quality specified.

**1)** Failure to submit acceptable CQC plan

**a)** If the contractor fails to submit an acceptable draft CQC plan within the time prescribed, construction shall not start. If an acceptable final plan is not submitted within a reasonable time, as determined by the engineer, the engineer may order the contractor to stop work until such time as an acceptable plan has been submitted. Any such stop work order shall not be considered a suspension of work pursuant to section 39 of the MDMR Standard Contract Terms and Conditions of MDMR (Attachment F) and the Contractor shall not be entitled to pay adjustments as a result of the stop work order. Failure to comply with the above requirements within the time prescribed will be considered a condition endangering the performance of the contract and may be considered grounds for termination of the contract in accordance with

section 40 in the MDMR Standard Contract Terms and Conditions.

**2)** Notification of Changes

**b)** After acceptance of the CQC Plan, the Contractor shall notify MDMR in writing of any proposed change. Proposed changes are subject to acceptance by MDMR.

## 3.03 COORDINATION MEETING

**A.** After the Preconstruction Conference, before start of construction, and prior to acceptance by MDMR of the CQC Plan, the Contractor shall meet with MDMR and discuss the Contractor's quality control system. The CQC Plan shall be submitted for review a minimum of 5 calendar days prior to the Coordination Meeting. During the meeting, a mutual understanding of the system details shall be developed, including the forms for recording the CQC operations, control activities, testing, administration of the system for both onsite and offsite work, and the interrelationship of Contractor's Management and control with the MDMR's Quality Assurance. Minutes of the meeting shall be prepared by MDMR and signed by both the Contractor and MDMR. The minutes shall become a part of the Contract file. There may be occasions when subsequent conferences will be called by either party to reconfirm mutual understandings and/or address deficiencies in the CQC system or procedures which may require corrective action by the Contractor.

## 3.04 QUALITY CONTROL ORGANIZATION

**A.** Personnel Requirements

**1.** The requirements for the CQC organization are a CQC System Manager and sufficient number of additional qualified personnel to ensure safety and contract compliance. The Safety and Health Manager shall receive direction and authority from the CQC System Manager and shall serve as a member of the CQC staff. Personnel identified in the technical provisions as requiring specialized skills to assure the required work is being performed properly will also be included as part of the CQC organization. The Contractor's CQC staff shall maintain a presence at the site at all times during progress of the Work and have complete authority and responsibility to take any action necessary to ensure Contract compliance. The CQC staff shall be subject to acceptance by MDMR. Complete records of all letters, material submittals, shop drawing submittals, schedules and all other project documentation shall be promptly furnished to the CQC organization by the Contractor. The CQC organization shall be responsible to maintain these documents and records at the site at all times, except as otherwise acceptable to MDMR.

**B.** CQC System Manager

**1.** The Contractor shall identify as CQC System Manager an individual within the onsite work organization who shall be responsible for overall management of CQC and have the authority to act in all CQC matters for the Contractor. The CQC System Manager shall be a construction person with a minimum of eight (8) years of experience in related work. This CQC System Manager shall be on the site at all times during construction and shall be employed by the prime Contractor. The CQC System Manager shall be assigned as Assurance Officer but may have duties as project superintendent in addition to quality control. An alternate for the CQC System Manager, having a minimum of three (3) years of experience, shall be identified in the plan to serve in the event of the primary CQC System Manager absence.

**C.** Organizational Changes

**1.** The Contractor shall maintain the CQC staff at full strength at all times. When it is necessary to make changes to the CQC staff, the Contractor shall revise the CQC Plan to reflect the changes and submit the changes to MDMR for acceptance.

## 3.05 SUBMITTALS AND DELIVERABLES

**A.** Submittals, if needed, shall be made as specified in Section 01 33 00 SUBMITTAL PROCEDURES. The CQC organization shall be responsible for certifying that all submittals and deliverables are in compliance with the Contract requirements.

## 3.06 CONTROL

**A.** Contractor Quality Control is the means by which the Contractor ensures that the construction, to include that of subcontractors and suppliers, complies with the requirements of the Contract. At least three phases of control shall be conducted by the CQC System Manager for each definable feature of the construction work as follows:

**1.** Preparatory Phase

**a.** This phase shall be performed prior to beginning work on each definable feature of the Work, after all required plans/documents/materials are approved/accepted, and after copies are at the Work site. This phase shall include:

**1)** A review of each paragraph of applicable specifications, reference codes, and standards. A copy of those sections of referenced codes and standards applicable to that portion of the Work to be accomplished in the field shall be made available by the Contractor at the preparatory inspection. These copies shall be maintained in the field and available for use by MDMR

personnel until final acceptance of the Work.

**2)** A review of the contract drawings.

**3)** A check to assure that all materials and/or equipment have been tested, submitted, and approved.

**4)** Review of provisions that have been made to provide required control inspection and testing.

**5)** Examination of the Work area to assure that all required preliminary Work has been completed and is in compliance with the Contract.

**6)** A physical examination of required materials, equipment, and sample work to assure that they are on hand, conform to approved shop drawings or submitted data, and are properly stored.

**7)** A review of the appropriate activity hazard analysis to assure safety requirements are met.

**8)** Discussion of procedures for controlling quality of the Work including repetitive deficiencies. Document construction tolerances and workmanship standards for that feature of the Work.

**9)** A check to ensure that the portion of the plan for the Work to be performed has been accepted by MDMR.

**10)** Discussion of the initial control phase.

**11)** MDMR shall be notified at least 24 hours in advance of beginning the preparatory control phase. This phase shall include a meeting conducted by the CQC System Manager and attended by the superintendent, other CQC personnel (as applicable), and the foreman responsible for the definable feature. The results of the preparatory phase actions shall be documented by separate minutes prepared by the CQC System Manager and attached to the daily CQC report. The Contractor shall instruct applicable workers as to the acceptable level of workmanship required in order to meet Contract Specifications.

**2.** Initial Phase

**a.** This phase shall be accomplished at the beginning of a definable feature of the Work. The following shall be accomplished:

**1)** A check of work to ensure that it is in full compliance with Contract requirements. Review minutes of the preparatory meeting.

**2)** Verify adequacy of controls to ensure full Contract compliance. Verify

required control inspection and testing.

**3)** Establish level of workmanship and verify that it meets minimum acceptable workmanship standards.

**4)** Resolve all differences.

**5)** Check safety to include compliance with and upgrading of the safety plan and activity hazard analysis. Review the activity analysis with each worker.

**6)** MDMR shall be notified at least 24 hours in advance of beginning the initial phase. Separate minutes of this phase shall be prepared by the CQC System Manager and attached to the daily CQC report. Exact location of initial phase shall be indicated for future reference and comparison with follow-up phases.

**7)** The initial phase should be repeated for each new crew to work onsite, or any time acceptable specified quality standards are not being met.

**3.** Follow-up Phase

**a.** Daily checks shall be performed to assure control activities, including control testing, are providing continued compliance with contract requirements, until completion of the particular feature of Work. The checks shall be made a matter of record in the CQC documentation. Final follow-up checks shall be conducted and all deficiencies corrected prior to the start of additional features of Work which may be affected by the deficient work. The Contractor shall not build upon nor conceal non-conforming work.

**4.** Additional Preparatory and Initial Phases

**a.** Additional preparatory and initial phases shall be conducted on the same definable features of Work if: the quality of on-going work is unacceptable; if there are changes in the applicable CQC staff, onsite production supervision or work crew; if work on a definable feature is resumed after a substantial period of inactivity; or if other problems develop.

## 3.07 COMPLETION INSPECTION

**A.** Punch-Out and Final Inspection

**1.** Near the end of the Work, or any increment of the Work, the MDMR and/or CQC Manager shall conduct an inspection of the Work. A punch list of items which do not conform to the approved drawings and specifications shall be prepared and included in the CQC documentation, as required by paragraph DOCUMENTATION. The list of deficiencies shall include the estimated date by which the deficiencies will be corrected. The CQC System Manager or staff shall

make a second inspection to ascertain that all deficiencies have been corrected. Once this is accomplished, the Contractor shall notify MDMR that the Work is ready for final survey and inspection. Failure of Contractor to have all Work acceptably complete for this inspection will be cause for the Agency to bill the Contractor for the Agency's additional inspection cost in accordance with Section 01 77 00 Closeout Procedures.

## 3.08 DOCUMENTATION

**A.** The Contractor shall maintain current records providing factual evidence that required quality control activities and/or tests have been performed. These records shall include the work of subcontractors and suppliers and shall be on an acceptable form that includes, as a minimum, the following information:

**1.** Contractor/subcontractor and their area of responsibility.

**2.** Operating plant/equipment with hours worked, idle, or down for repair.

**3.** Work performed each day, giving location, description, and by whom. When Network Analysis (NAS) is used, identify each phase of the Work performed each day by NAS activity number.

**4.** Test and/or control activities performed with results and references to specifications/drawings requirements. The control phase shall be identified (Preparatory, Initial, Follow-Up). List of deficiencies noted, along with corrective action.

**5.** Quantity of materials received at the site with statement as to acceptability, storage, and reference to specifications/drawings requirements.

**6.** Submittals and deliverables reviewed, with contract reference, by whom, and action taken.

**7.** Offsite surveillance activities, including actions taken.

**8.** Job safety evaluations stating what was checked, results, and instructions or corrective actions.

**9.** Instructions given/received and conflicts in plans and/or specifications.

**10.** Contractor's verification statement.

**B.** These records shall indicate a description of trades working on the Project; the number of personnel working; weather conditions encountered; and any delays encountered. These records shall cover both conforming and deficient features and shall include a statement that equipment and materials incorporated in the Work and workmanship comply with the Contract. The original and one copy of these records in report form shall be furnished to MDMR daily within 24 hours after the date covered by the report,

except that reports need not be submitted for days on which no work is performed. As a minimum, one report shall be prepared and submitted for every 7 days of no work and on the last day of a no work period. All calendar days shall be accounted for throughout the life of the Contract. The first report following a day of no work shall be for that day only. Reports shall be signed and dated by the CQC System Manager. The report from the CQC System Manager shall include copies of test reports and copies of reports prepared by all subordinate quality control personnel.

## 3.09 NOTIFICATION OF NONCOMPLIANCE

**A.** MDMR will notify the Contractor of any detected noncompliance with the foregoing requirements. The Contractor shall take immediate corrective action after receipt of such notice. Such notice, when delivered to the Contractor at the Work site, shall be deemed sufficient for the purpose of notification. If the Contractor fails or refuses to comply promptly, MDMR may issue an order stopping all or part of the work until satisfactory corrective action has been taken. No part of the time lost due to such stop orders shall be made the subject of claim for extension of time or for excess costs or damages by the Contractor.

**END OF SECTION 01 40 00**

# SECTION 01 77 00

# CLOSEOUT PROCEDURES

## PART 1 - GENERAL

### 1.01 REQUIREMENTS

**A.** Comply with requirements stated in the Agreement (Section 00 52 15), the Standard Contract Terms and Conditions (Attachment F of Invitation for Bids) and all Specifications of these Contract Documents.

### 1.02 RELATED SECTIONS

**A.** Section 01 33 00 – Submittal Procedures

**B.** Section 01 32 23 - Surveys and Layout Data

**C.** Section 01 40 00 – Contractor Quality Control

### 1.03 CLOSEOUT PROCEDURES

**A.** Contractor will comply with requirements stated in these specifications for administrative procedures in closing out the Work.

**B.** Contractor will submit written certification that Contract Documents have been reviewed, Work has been inspected, and that Work is complete in accordance with Contract Documents and ready for Engineer's inspection.

**C.** Contractor will provide submittals to MDMR that are required by governing or other authorities.

**D.** Contractor will submit final Application for Payment identifying total adjusted Contract Sum, previous payments, and sum remaining due.

### 1.04 FINAL INSPECTION AND REMOVAL OF ALL CONSTRUCTION EQUIPMENT AND ANCILLARY FACILITIES

**A.** When Contractor considers the Work is complete, he shall submit written certification that:

**1.** Contract Documents have been reviewed.

**2.** Work has been inspected for compliance in accordance with Paragraph 3.07 A of Section 01 40 00 – CONTRACTOR QUALITY CONTROL.

**B.** When the Engineer finds that the Work is acceptable under the Contract Documents, he shall request the Contractor to make closeout submittals in accordance with Section 1.05 below.

**C.** In the event that the Final Inspection concludes that the construction progress does not meet completion status, the Contractor will be required to reimburse the Agency for all costs associated with the Final Inspection inclusive of payroll expenses of any engineer or regulatory agency staff involved, equipment rentals and any travel related expenses. Contractor may pay for these additional expenses directly to the Agency or have the expenses deducted from the final payment.

## 1.05 CONTRACTOR'S CLOSEOUT SUBMITTALS

**A.** Contractor will provide as closeout submittals the following:

**1.** Evidence of Payment and Release of Liens, see Appendix B.

**2.** Final inspection reports by all regulatory agencies demonstrating the agencies' final approval.

**3.** At Contract close-out, deliver Record Documents to MDMR.

**4.** Accompany submittal with transmittal letter in triplicate containing:

**a.** Date;

**b.** Project title and number;

**c.** Contractor's name and address;

**d.** Title and number of each Record Document; and

**e.** Signature of Contractor or his authorized representative.

## 1.06 PROJECT RECORD DOCUMENTS

**A.** Final Payment will not be made to Contractor until Project Record Documents in accordance with this Section are submitted and approved.

**B.** Contractor shall maintain in a safe place at the Site one record copy of all Drawings, Specifications, Addenda, Change Orders, Work Change Directives, Field Orders, and written interpretations and clarifications in good order and annotated to show changes made during construction. These record documents together with all approved Samples and a counterpart of all approved Shop Drawings will be available to Engineer for reference. Upon completion of the Work, these Record Documents, Samples, and Shop Drawings will be delivered to Engineer for Owner.

**C.** Three electronic copies of all record documents will also be submitted to Engineer for MDMR.

## PART 2 - PRODUCTS (NOT APPLICABLE)

## PART 3 - EXECUTION (NOT APPLICABLE)

**END OF SECTION 01 77 00**

# SECTION 01550

# CONSTRUCTION SEQUENCE & REQUIREMENTS

## PART 1 - GENERAL

### 1.01 SITE CONDITIONS

**A.** Several areas of construction under this contract must be coordinated with the Engineer, along with the Harrison County Sand Beach Authority, and accomplished in a logical order to allow construction to be completed within the time allowed by Contract Documents. Coordinate the activities with the other contractors, if any, to allow orderly and timely completion of all the work.

**B.** When access to the construction site causes disruption to local roadways, provide and initiate an acceptable Traffic Plan which meets MDOT and the latest edition of the MUTCD requirements. A standard MDOT traffic control plan is provided in the contract drawings to assist the contractor in the development of an acceptable traffic control plan. Unless authorized in writing, the contractor shall maintain continuous traffic flow in at least one (1) travel lane in each direction along Highway 90.

**C.** Provide any corrective measure or temporary facilities necessary to perform the work at no additional cost to the Owner.

**D.** When the work requires an existing facility or utility to be taken out of operation, temporarily or permanently, notify the Owner and Engineer a minimum of seven (7) days in advance. Coordination with the Owner, City of Gulfport and Harrison County Sand Beach shall be required for shutdowns, diversions of flow, or use of temporary pumping methods whether temporary or permanent throughout the duration of construction.

**E.** Regular working hours are defined as 8-10 hours per day, Monday through Friday, excluding holidays, between the hours of 7:00 AM and 5:00 PM. Requests to work other than regular working hours shall be submitted to Engineer not less than forty-eight (48) hours prior to any proposed weekend work or scheduled extended work weeks. Emergency work may be accomplished without obtaining prior permission, but should be properly documented. Owner and Engineer shall be informed immediately via phone or e-mail of any emergency operations or situations.

**F.** Erosion and sediment control measures shall be constructed and maintained in accordance with the SWPPP and SCNOI throughout the duration of construction. Installation and maintenance of erosion and sediment control measures shall be accounted for in the construction schedule. The Contractor shall stage his work, as much as possible, to minimize disturbance to soils and decrease the potential for sediment runoff.

## 1.02 CONSTRUCTION CONSTRAINTS

**A.** The following is a list of constraints to consider in developing the overall plan of construction. This list is not intended to release the Contractor from the responsibility to coordinate the work in any manner which will ensure project completion within the time allowed.

**1.** Implementation of the erosion and sediment control plan in accordance with contractor developed SWPPP and SCNOI;

**2.** Site Access – All Material and Equipment Deliveries shall occur via the existing parking bay located next to Highway 90 and the construction site. No interruption to traffic flow along Highway 90 will be allowed without prior approval.

**3.** Coordination with the Sand Beach Authority, MDOT and City of Gulfport;

**4.** Uninterrupted drainage of Coffee Creek while the new box culvert systems is constructed;

**5.** Dewatering of subgrades to perform all work in the "dry";

**6.** Contractor shall secure project area at all times to ensure public safety.

**7.** No work shall occur on project sites twenty-four (24) hours before, to twenty-four (24) hours after, the following holidays: Memorial Day, Independence Day or during the week of Cruisin' the Coast. Site shall be secured and equipment staged on the beach per the Engineer's direction.

**8.** Stringent grading tolerances will be required on the East Sand Plaza – See EARTHWORK specifications.

## 1.03 CONSTRUCTION SCHEDULE

**A.** See Section 01 32 00 for scheduling requirements.

## 1.04 CONSTRUCTION SIGN

**A.** The contractor will erect, on adequate 4x4 supports, and maintain one (1) neatly constructed and painted pressure treated three-fourths inch (¾") thick plywood sign approximately four feet by eight feet (4' x 8'). The Contractor shall submit a formal proof that includes all colors, letters, layout and location of the sign for approval prior to its fabrication. No other signs will be displayed on the job site without permission of the Professional. The displaying of sign advertisements is strictly prohibited.

**B.** Sign to be white background with black lettering/seal. Text style to be Times New Roman. Color of rectangular field at bottom to be selected by Owner. Provide custom Using Agency logo at circular white field of up to three additional colors. No corporate logos for Architect or Contractor shall be permitted. Where additional rendered signage

is specified elsewhere, it shall consist of (1) or (2) additional four feet by eight feet (4' x 8') panels, contiguous to the right side of primary project sign.

# THIS PROJECT IS FUNDED BY THE TAXPAYERS OF MISSISSIPPI

## GOVERNOR TATE REEVES

## PROJECT NAME
GS# 111-111
HB1111 or SB1111, LAWS OF 1111

## DEPARTMENT OF FINANCE & ADMINISTRATION
BUREAU OF BUILDING, GROUNDS & REAL PROPERTY MANAGEMENT

## ARCHITECT
ARCHITECT NAME

## CONTRACTOR
CONTRACTOR NAME
MISSISSIPPI C.O.R. #11111

## USING AGENCY NAME
HEAD OF USING AGENCY NAME
GOVERNING BOARD (WHERE APPLICABLE)

# SECTION 02200

# STRUCTURE DEMOLITION

## PART 1 - GENERAL

### 1.01 RELATED DOCUMENTS

**A.** Drawings and general provisions of the Contract, including General and Supplementary Conditions and Division 01 Specification Sections, apply to this Section.

### 1.02 SUMMARY

**A.** Section Includes:

**1.** Removing above grade and below-grade existing outfall construction to include, but not limited to, precast wall panels, concrete spreaders, wooden piling, wooden handrail at the north side sidewalk, signage and a walkover bridge. The contractor shall excavate down to required subgrades and uncover the slab extending out the south side of the box culvert under Highway 90 and shall neatly remove it flush with the south face of the box to the satisfaction of the structural engineer.

**B.** Related Requirements:

**1.** Section 01 32 33 "Photographic Documentation" for preconstruction photographs taken prior to the demolition of existing wall panels, spreaders and associated pilings.

### 1.03 DEFINITIONS

**A.** Remove: Detach all items from existing construction and properly dispose of offsite.

### 1.04 MATERIALS OWNERSHIP

**A.** Unless otherwise directed by Engineer, demolition of concrete wall panels, precast spreaders and wood pilings shall remain the property of the contractor and be properly disposed of by the contractor. The walkover bridge and signage shall be delivered to the Sand Beach Authority.

**B.** Historic items, relics, antiques, and similar objects including, but not limited to, cornerstones and their contents, commemorative plaques and tablets, and other items of interest or value to Owner that may be uncovered during demolition remain the property of Owner.

**1.** Carefully salvage in a manner to prevent damage and promptly return to Owner.

### 1.05 PREDEMOLITION MEETINGS

**A.** Pre-demolition Conference: Conduct conference at Engineers Office in Gulfport. Contractor shall prepare an agenda to address the following items at a minimum:

1. Inspect and discuss condition of construction to be demolished.
2. Review structural load limitations of existing structures.
3. Review and finalize demolition schedule and verify availability of demolition personnel, equipment, and facilities needed to make progress and avoid delays.
4. Review and finalize protection requirements.
5. Review procedures for dust control and safety of contractor personnel as well as the public at large.
6. Review procedures for protection of existing Seawall along Highway 90.
7. Review procedures for maintaining positive drainage of Coffee Creek during the demolition and through the construction process.

## 1.06 PREDEMOLITION PHOTOGRAPHS

**A.** Predemolition Photographs or Video: Show existing conditions of adjoining construction and site improvements, including finish surfaces that might be misconstrued as damage caused by salvage and demolition operations. Comply with Section 01 32 33 "Photographic Documentation." Submit before the Work begins.

## 1.07 CLOSEOUT SUBMITTALS

## 1.08 FIELD CONDITIONS

**A.** Do not close or obstruct walkways, exits, or other facilities used by occupants of the Sand Beach without written permission from authorities having jurisdiction.

## 1.09 COORDINATION

**A.** Arrange demolition schedule so as not to interfere with any operations of the Harrison County Sand Beach Authority.

# PART 2 - PRODUCTS

## 2.01 PERFORMANCE REQUIREMENTS

**A.** Regulatory Requirements: Comply with governing EPA notification regulations before beginning demolition. Comply with hauling and disposal regulations of authorities having jurisdiction.

**B.** Standards: Comply with ANSI/ASSE A10.6 and NFPA 241.

# PART 3 - EXECUTION

## 3.01 EXAMINATION

**A.** Review Project Record Documents of existing construction or other existing condition and hazardous material information provided by Engineer. Engineer does not guarantee that existing conditions are same as those indicated in Project Record Documents.

## 3.02 PREPARATION

## 3.03 UTILITY SERVICES

**A.** Existing Coffee Creek Outfall:

1. At no time shall the storm water runoff from Coffee Creek and associated upland areas be interrupted and all existing drainage shall remain active at all times.
2. Contractor shall make the necessary arrangements, satisfactory to the engineer, to provide any and all acceptable bypass runoff measures until the new box culvert system can be installed and readied to receive water flow.
3. It is anticipated that existing runoff could potentially occur directly on the sand beach; however, trenching or pumping may be required to compensate for elevation differences. The contractor shall be responsible for all trenching, pumping and recondition of the beach after the new box culvert system utility lines are put into service under this bid.

## 3.04 PROTECTION

**A.** Temporary Shoring: Provide and maintain interior and exterior shoring, bracing, or structural support to preserve stability and prevent unexpected movement or collapse of construction being demolished.

1. Strengthen or add new supports when required by deteriorating site conditions.

**B.** Existing Utilities to Remain: Maintain utility services to remain and protect from damage during demolition operations.

1. Do not interrupt existing utilities serving adjacent occupied or operating areas unless authorized in writing by Engineer and/or authorities having jurisdiction.

**C.** Temporary Protection: Erect temporary protection, such as walks, fences and/or passageways where required by authorities having jurisdiction and as indicated.

1. Protect all adjacent areas, buildings and facilities from damage due to demolition activities.
2. Protect existing site improvements, appurtenances, and landscaping to remain.
3. Provide temporary barricades and other protection required to prevent injury to people and damage to adjacent buildings and facilities to remain.
4. Provide protection to ensure safe passage of people around the demolition area.

**D.** Remove temporary barriers and protections where hazards no longer exist. Where open excavations or other hazardous conditions remain, leave temporary barriers and protections in place.

## 3.05 DEMOLITION, GENERAL

## 3.06 DEMOLITION BY EXPLOSIVES

**A.** Explosives: Use of explosives is not permitted.

## 3.07 DEMOLITION BY MECHANICAL MEANS

## 3.08 SITE RESTORATION

**A.** Site Grading: Uniformly grade area of demolished construction to a smooth surface, free from irregular surface changes. Provide a smooth transition between adjacent existing grades and new grades.

## 3.09 REPAIRS

**A.** Promptly repair any damage to adjacent areas caused by demolition operations.

## 3.10 DISPOSAL OF DEMOLISHED MATERIALS

**A.** Remove demolition waste materials from Project site and dispose of them in an EPA-approved construction and demolition waste landfill acceptable to authorities having jurisdiction.

1. Do not allow demolished materials to accumulate on-site.
2. Remove and transport debris in a manner that will prevent spillage on adjacent surfaces and areas.

**B.** Do not burn demolished materials.

## 3.11 CLEANING

**A.** Clean adjacent roadways, structures and improvements of dust, dirt, sand and debris caused by demolition operations. Return adjacent areas to condition existing before demolition operations began.

1. Clean roadways of sand and debris caused by construction activities.

**END OF SECTION 02200**

# SECTION 02240

# DEWATERING

## PART 1 - GENERAL

### 1.01 RELATED DOCUMENTS

**A.** Drawings and general provisions of the Contract, including General and Supplementary Conditions and Division 01 Specification Sections, apply to this Section.

### 1.02 SUMMARY

**A.** Section includes construction dewatering.

**B.** Related Requirements:

**1.** Section 01 32 33 "Photographic Documentation" for recording preexisting conditions and dewatering system progress.

**2.** Section 02300 "Earthwork" for excavating, backfilling, site grading, and controlling surface-water runoff and ponding.

### 1.03 PREINSTALLATION MEETINGS

**A.** Preinstallation Conference: Conduct conference at Engineers office located in Gulfport, MS.

**1.** Contractor shall verify availability of Installer's personnel, equipment, and facilities needed to make progress and avoid delays.

**2.** Review condition of site to be dewatered including coordination with temporary erosion-control measures and temporary controls and protections.

**3.** Review geotechnical borings.

**4.** Review proposed site clearing and excavations.

**5.** Review existing utilities and subsurface conditions.

**6.** Review observation and monitoring of dewatering system.

### 1.04 ACTION SUBMITTALS

**A.** Shop Drawings: For dewatering system, prepared by, or under, the supervision of a qualified professional engineer.

**1.** Include plans, elevations, sections, and details.

**2.** Show arrangement, locations, and details of wells and well points; locations of risers, headers, filters, pumps, power units, and discharge lines; and means of discharge, control of sediment, and disposal of water.

3. Include layouts of piezometers and flow-measuring devices for monitoring performance of dewatering system.
4. Include written plan for dewatering operations including sequence of well and well-point placement coordinated with excavation shoring and bracings and control procedures to be adopted if dewatering problems arise.

## 1.05 INFORMATIONAL SUBMITTALS

A. Qualification Data: For Installer and professional engineer.

B. Field quality-control reports.

## 1.06 QUALITY ASSURANCE

A. Installer Qualifications: An experienced installer that has specialized in design of dewatering systems and dewatering work.

## 1.07 FIELD CONDITIONS

A. Project-Site Information: Geotechnical borings have been prepared for this Project and is available for information only. Owner and Engineer are not responsible for interpretations or conclusions drawn from this data.

1. Make additional test borings and conduct other exploratory operations necessary for dewatering according to the performance requirements.
2. The geotechnical borings are included under Appendix A.

# PART 2 - PRODUCTS

## 2.01 PERFORMANCE REQUIREMENTS

A. Dewatering Performance: Contractor shall be responsible for the design, furnish, install, test, operate, monitor, and maintain dewatering system of sufficient scope, size, and capacity to control hydrostatic pressures and to lower, control, remove, and dispose of any and all ground water or surface water and permit excavation and construction to proceed on dry, stable subgrades. Contractor shall provide a fully operational system to pull the water table down to a minimum of one foot below the bottom of any excavations required by the drawings.

1. Design dewatering system, including comprehensive engineering analysis by a qualified professional engineer.
2. Continuously monitor and maintain dewatering operations to ensure erosion control, stability of excavations and constructed slopes, prevention of flooding in excavation, and prevention of damage to subgrades and permanent structures.
3. Prevent surface water from entering excavations by grading, dikes, or other

means.

4. Accomplish dewatering without damaging existing seawall, roadways, buildings, structures, and site improvements adjacent to excavation.

5. Remove dewatering system when no longer required for construction.

**B.** Regulatory Requirements: Comply with governing EPA notification regulations before beginning dewatering. Comply with water- and debris-disposal regulations of authorities having jurisdiction, if any.

## PART 3 - EXECUTION

### 3.01 PREPARATION

**A.** Protect structures, utilities, sidewalks, pavements, and other facilities from damage caused by settlement, lateral movement, undermining, washout, and other hazards created by dewatering operations.

1. Prevent surface water and subsurface or ground water from entering excavations, from ponding on prepared subgrades, and from flooding site or surrounding area.

2. Protect subgrades and foundation soils from softening and damage by rain or water accumulation.

**B.** Install dewatering system to ensure minimum interference with roads, seawalls, streets, walks, and other adjacent occupied and used facilities.

1. Do not close or obstruct streets, walks, or other adjacent occupied or used facilities without permission from Owner and authorities having jurisdiction. Provide alternate routes around closed or obstructed traffic ways if required by authorities having jurisdiction.

**C.** Provide temporary grading to facilitate dewatering and control of surface water.

### 3.02 INSTALLATION

**A.** Install dewatering system utilizing wells, well points, or similar methods complete with pump equipment, standby power and pumps, filter material gradation, valves, appurtenances, water disposal, and surface-water controls.

1. Space well points or wells at intervals required to provide sufficient dewatering as described and required.

2. Use filters or other means to prevent pumping of fine sands or silts from the subsurface.

**B.** Place dewatering system into operation to lower water to specified levels before excavating below ground-water level.

**C.** Provide sumps, sedimentation tanks, and other flow-control devices as required by authorities having jurisdiction.

**D.** It is the contractor's responsibility to maintain dewatering on continuous basis so as to perform all work in the dry. Should any part of system become inadequate or fails, necessary repairs or replacements shall occur within a twenty-four (24) hour period. Failure to re-energize the system within this time period may result in rejection of work at the sole discretion of the engineer.

## 3.03 OPERATION

**A.** Operate system continuously until the box culvert system, along with all concrete foundations and retaining walls have been constructed and fill materials have been placed or until dewatering is no longer required by the engineer.

**B.** Operate system to lower and control ground water to permit excavation, concrete construction, and placement of fill materials on dry subgrades. Drain water-bearing strata above and below bottom of concrete foundations and other excavations.

**1.** Do not permit open-sump pumping that leads to loss of fines, soil piping, subgrade softening, and slope instability.

**2.** Reduce hydrostatic head in water-bearing strata below subgrade elevations of foundations, drains, sewers, and other excavations.

**3. Maintain piezometric water levels to a minimum of twelve (12) inches below bottom of any excavation.**

**C.** Dispose of water removed by dewatering in a manner that avoids endangering public health, property, and portions of work under construction or completed. Dispose of water and sediment in a manner that avoids inconvenience to others.

**D.** Remove dewatering system from Project site on completion of dewatering. Plug or fill well holes with sand.

## 3.04 FIELD QUALITY CONTROL

**A.** Observation Wells: Provide observation wells or piezometers and take measurements to ensure compliance with the minimum of twelve (12) inches below bottom of excavation. Number and placement of observation wells shall be agreed upon between Owner and Contractor – minimum of six (6) each.

**1.** Observe and record daily elevation of ground water and piezometric water levels in observation wells.

**2.** Repair or replace, within twenty-four (24) hours, observation wells that become inactive, damaged, or destroyed. In areas where observation wells are not functioning properly, suspend construction activities until reliable observations

can be made. Add or remove water from observation-well risers to demonstrate that observation wells are functioning properly.

3. Fill observation wells, remove piezometers, and fill holes when dewatering is completed.

**B.** Provide continual observation to ensure that subsurface soils are not being removed by the dewatering operation.

**C.** Prepare reports of observations.

## 3.05 PROTECTION

**A.** Protect and maintain dewatering system during dewatering operations.

**B.** Promptly repair damages to adjacent facilities caused by dewatering.

**END OF SECTION 02240**

# SECTION 02300

# EARTHWORK

## PART 1 - GENERAL

### 1.01 DESCRIPTION: SCOPE OF WORK

**A.** This section includes performing site preparation, excavation, trenching, borrow, backfilling, compacting, and finished grading necessary to construct the finished grades indicated for structures and on-grade slabs or site work.

### 1.02 RELATED SECTION

**A.** Section 02240 - Dewatering

### 1.03 DEFINITIONS

**A.** Backfill: Material used in refilling a cut or other excavation.

**B.** Cohesive Materials: Cohesive materials include materials classified by ASTM D 2487 as GC, SC, ML, CL, MH, and CH. Materials classified as GM and SM will be identified as cohesive only when fines have a plasticity index greater than zero.

**C.** Cohesionless Materials: Cohesionless materials include materials classified by ASTM 2487 as GW, GP, SW, and SP. Materials classified as GM and SM will be identified as cohesionless only when the fines have a plasticity index of zero.

**D.** Compaction: The process of mechanically stabilizing a material by increasing its density at a controlled moisture condition. "Degree of Compaction" is expressed as a percentage of the maximum density obtained by the test procedure described in D 1557 for general soil types abbreviated in this specification as "a percent ASTM D 1557 maximum density" as shown in Table 3.4.3.

**E.** Embankment: A "fill" having a top that is higher than adjoining ground.

**F.** Excavation: The removal of soil, rock, or hard material to obtain a specified depth or elevation.

**G.** Undercut Excavation: Any soils below plan grade determined by the Project Engineer to be unsatisfactory shall be excavated to the depths directed by Engineer, and compensated based on the unit price for Undercut Excavation listed on the Bid Form.

**H.** Excavation Spoils: Any material removed from excavation and not used as backfill shall be spread on the beach to match existing grades. If material is unsuitable for disposal on adjacent beach areas, Engineer may require removal from site under unit price for Unsuitable Soil Removal listed on Bid Form. Any, and all, organic or vegetative debris shall be removed from the site at Contractor's expense.

**I.** Fill: Specified material placed at a specified degree of compaction to obtain and indicated grade or elevation.

**J.** Granular Subbase: A dense, well-graded aggregate mixture of sand-gravel or crushed stone with suitable binder soil, placed on a subgrade to provide a suitable foundation for further construction.

**K.** Hard Material: Weathered rock, dense consolidated deposits or conglomerate materials which are not included in the definition of "rock" but which usually require the use of heavy excavation equipment with ripper teeth or the use of jack hammers for removal.

**L.** Lift: A layer (or course) of soil placed on top of a previously prepared or placed soil in a fill or embankment.

**M.** Field Measure: Actual field measured, compacted volume of soil placed or excavated.

**1.04 SUBMITTALS**

**A.** Certified Laboratory Test Reports for each earthwork material utilized on site.

**B.** Density tests completed by a third-party testing firm approved by the owner and paid for by the Contractor to confirm adequate compaction of materials. Unless otherwise noted or directed by Engineer, all materials shall be compacted to 95 percent standard density.

**1.05 DELIVERY AND STORAGE: Deliver and store materials in a manner to prevent contamination or segregation.**

**1.06 CRITERIA FOR BIDDING: Base bids on the following criteria:**

**A.** Surface elevations along the beach vary and invert elevations are as indicated on plans.

**B.** No pipes or other man-made obstructions, except those indicated or noted, are expected to be encountered.

**C.** Blasting will not be permitted. Remove material in an approved manner.

**1.07 PROTECTION**

**A.** Dewatering: Include the disposal of surface or ground water which may accumulate in open excavations, unfinished fills, or other low areas. Remove water by trenching where approved, pumping, or other methods to prevent softening of exposed surfaces. Dewatering plan shall include the rerouting of any ground water, storm water runoff or natural drainage if necessary and shall comply with all local environmental requirements.

**1.** Surface Drainage: So that construction operations progress successfully, completely drain construction site during periods of construction to keep soil materials sufficiently dry. Provide temporary ditches, swales, and other drainage

features and equipment as required to maintain dry soils. When unsuitable working platforms for equipment operation and unsuitable soil support for subsequent construction features develop, immediately notify the engineer and follow his instructions.

**2.** Subsurface Drainage: Based on site surface and subsurface conditions, available soil, and hydrological data. Remove water by pumping or other methods to prevent softening of surfaces exposed by excavation. Use filters on dewatering devices to prevent removal of fines from soil. Provide erosion control at the outlet of piping to prevent erosion.

**B.** Utilities: Movement of construction machinery and equipment over pipes and utilities during construction shall be at the Contractor's risk. For work immediately adjacent to or for excavations exposing a utility or other buried obstruction, use hand or light equipment excavation. Start hand or light equipment excavation on each side of the indicated obstruction and continue until the obstruction is uncovered or until clearance for the new grade is assured. Support uncovered lines or other existing work as affected by the contract excavation. Report damage to utility lines or subsurface construction immediately to the Engineer.

**C.** Protection and Restoration of Surfaces: Protect newly graded areas from traffic, erosion, and settlements. Repair and reestablish damaged or eroded slopes, elevations or grades and restore surface construction prior to acceptance. Protect existing ditches and storm drain inlets from water-borne soil.

## 1.08 STORM WATER POLLUTION PREVENTION PLAN

**A.** See Section 01 35 43, “Environmental Protection”.

**B.** Prepare a Small Construction Notice of Intent (SCNOI) including a Stormwater Pollution Prevention Plan (SWPPP) according to Mississippi DEQ requirements. Maintain copy of SCNOI on job site throughout project term.

# PART 2 - PRODUCTS

## 2.01 MATERIALS

**A.** Soil Materials: Provide materials free from debris, roots, wood, scrap materials, vegetable matter or refuse.

**1.** On-site Borrow Material: Unless otherwise shown on the plans or directed by the Engineer, general backfill adjacent to concrete structures shall be sandy material obtained from the trench excavation or adjacent grades. On-site borrow shall be clean sand free of debris. No separate payment shall be made for on-site borrow material to construct the project to the lines and grades shown on the plans.

2. Select Sand Fill: Select sand fill shall be imported clean sand with less than 10 percent passing the No. 200 sieve. Select sand backfill shall only be used after receipt of written direction by Engineer and compensated for as listed in the unit price section of the bid form.

## PART 3 - EXECUTION

### 3.01 EXCAVATION AND TRENCHING

**A.** Excavation shall include the loosening, loading, removing, transporting, and disposing of all materials, wet or dry, above or below ground, within the allowable limits, necessary to be removed to install all work included in this contract to the lines, grades, and dimensions specified in the plans. Contractor shall appropriately "lay back" all excavations in accordance with OSHA and as site conditions demand for a safe working environment. During all excavations Contractor shall immediately separate, remove and properly dispose of all organic and vegetative debris, to include any concrete or foreign debris unsuitable to use as backfill. Keep excavations free from water while construction is in progress. Backfill excavations and trenches with on-site borrow material. Over digging is not permitted unless authorized by the Engineer. Notify the Engineer immediately in writing in the event that it becomes necessary to remove rock, hard material, or other material defined as unsatisfactory to a depth greater than indicated and an adjustment in contract price will be considered. In the event undercut excavation i**s required and approved by the Engineer, Contractor shall backfill undercut excavations with** unit price materials as listed in the Bid Form. **Soils over excavated, disturbed or weakened by the construction operations or exposure to weather shall be excavated and backfilled with on-site borrow material a**nd compacted as specified herein at no additional cost to the Owner.

### 3.02 BORROW MATERIALS

**A.** The lump sum contract price includes the use of on-site sand borrow sourced from the trench excavation or adjacent grades. All used borrow materials must be free of old concrete debris and woody or vegetative matter. Only if directed by Engineer shall off site borrow materials be allowed as fill. If materials excavated from the trench are unsuitable and borrow is sourced from adjacent areas, the contractor shall grade the borrow areas to match existing grades and shall not leave any holes or sumps.

### 3.03 PIPE EMBEDMENT AND BACKFILL (not used)

### 3.04 STRUCTURE EMBEDMENT AND BACKFILLING

**A.** Embedment of structures and placement of backfill shall proceed as detailed in the plans. Backfill shall be free of unsuitable debris and woody or vegetative matter.

**B.** In addition to the requirements indicated on the structural drawings, all areas that are considered slab on grade shall have a 6” layer of compacted #57 stone placed over lapped Tensar TX 160 (or equal) geogrid.

**C.** Place backfill adjacent to structures and compact to prevent wedging action or eccentric loading upon or against the structures. Step or serrate slopes bounding or within areas to be backfilled to prevent sliding of the fill. Do not use equipment for backfilling operations or for the formation of embankments against structures that will overload the structure. Backfilling against concrete will be done only after approval has been obtained from the Engineer.

**D.** The native material at the bottom of the excavation shall be kept dry, free of loose and soft material and be compacted to a minimum of 95 percent Standard Proctor or as directed by Engineer. Contractor shall place AASHTO #57 stone, compacted with a plate tamper to the satisfaction of the Engineer, to lines and grades depicted on the plans.

**E.** Further backfill utilizing on-site borrow material from the structure and/or trench excavation may then proceed to the original ground surface in 12-inch lifts compacted to a minimum of 95 percent Standard Proctor or as directed by Engineer.

**F.** All surplus material not used in backfilling shall be wasted and graded on adjacent grades unless determined unsuitable by the Engineer.

## 3.05 FINISH OPERATIONS

**A.** Site Grading: Grade to finished grades indicated on the plans within 0.10 foot. Where finished grades are not shown on the plans, grade areas to match adjacent beach and to provide suitable surfaces for Harrison Sand Beach raking machines. Existing grades which are to remain but are disturbed by the Contractor's operations shall be restored as specified herein.

**B.** Finishing Subgrades under Structures and Pavements: Finish the surface of the top lift of the fill or top of the subgrade to the elevation and cross section indicated. The finished surface shall be smooth and of uniform texture. The surface shall show no deviations in excess of 3/8 inch when tested with a 10-foot straightedge.

**C.** Protection of Surfaces: Protect newly graded areas from traffic, erosion, and settlements that may occur as required in Section "Environmental Protection" and as defined in subparagraph "Protection and Restoration of Surfaces" of this section. Repair or reestablish damaged grades, elevations, or slopes prior to acceptance of work.

**D.** East Sand Plaza: The entire area adjacent to the existing seawall bounded by the new outfall structure and the retaining walls, shall be blue topped & graded to a tolerance

of plus/minus 1/2". Borrow material, if needed, will be obtained from adjacent beach areas.

## 3.06 FIELD SAMPLING AND TESTING

**A.** Contractor shall contract with a third-party testing firm approved by Owner to perform all testing and laboratory work to complete material sampling, proctors, compaction and density tests. Submit composite sample for each material source of backfill and bedding material to be utilized.

**B.** Tests: Contractor shall establish proctors for each material (native and non-native) to be utilized as backfill or bedding. Contractor shall perform density tests for compaction compliance satisfactory to the Engineer. Location and quantity of tests to be determined in the field by Engineer.

**END OF SECTION 02300**

# SECTION 02700

# CRUSHED STONE BASE

## PART 1 - GENERAL

### 1.01 DESCRIPTION OF WORK

**A.** Section includes construction of crushed stone base.

### 1.02 RELATED SECTION

**A.** Section 02300 - Earthwork

**B.** Section 03300 - Cast-in-Place Concrete

### 1.03 SUBMITTALS

**A.** Submit a minimum twelve inches by twelve inches (12”x12”) sample of geogrid. Submit manufacturer's literature. Submit manufacturer's installation instructions and general recommendations.

**B.** Submit a minimum twelve inches by twelve inches (12”x12”) sample of geotextile. Submit manufacturer's literature. Submit manufacturer's installation instructions and general recommendations.

**C.** Granular Materials: Supplier shall submit certifications on MDOT #57 Stone, MDOT 100 lb Rip Rap and 3x6 Gabion Stone.

## PART 2 - PRODUCTS

### 2.01 MATERIALS

**A.** Aggregate shall be clean crushed stone, graded in accordance with Sizes No. 57, 100 lb. rip rap and 3x6 gabion stone, per the MDOT Specifications.

**B.** Geogrid reinforcement shall be an interlocking biaxial polymeric grid, Tensar TX 160, from The Tensar Corporation, Morrow, GA, or approved equal.

**1.** Structural Soil Reinforcement Geogrid - The geogrid shall be integrally formed and deployed as a single layer.

**C.** Geotextile: ASTM D 6707/D6707M – Latest Edition; Non-woven 8 oz. geotextile fabric.

## PART 3 - EXECUTION

### 3.01 SUBGRADE PREPARATION

**A.** Prepare existing subgrade in accordance with the requirements specified in Section 02300, Earthwork.

### 3.02 INSTALLATION OF GEO-TEXTILE and GEOGRID:

**A.** Excavate to planned sub-base depths and dewater as required to maintain workable sub-surface soils.

**B.** Place a non-woven (8oz) geo textile fabric as the first layer of reinforcement with a minimum 3-foot overlap of adjoining fabric rolls. Laps shall be pinned at 1-foot intervals to keep fabric from pulling apart.

**C.** Place geo-grid directly above the fabric and overlap adjoining rolls by three feet. Laps shall be adequately tied together with heavy duty zip ties at no more than 1-foot intervals to allow the grid to work as a single unit. Geo-grid should consist of Tensar TX160, or equal.

**D.** The geo-synthetic material should extend at least 4 feet beyond the end and sides of the rock placement and then be wrapped back over the rock base before placement of concrete. Rolled edges shall be tied in such a manner that it will retain its plan shape up to and during the period of concrete placement. This may be accomplished by threading a piece of rebar laterally thru the grid and tying it to the opposite piece of grid which also has a bar threaded into the grid.

**E.** Place geo-synthetic material to the dimensions shown on plans.

**F.** Crushed stone base rock should consist of #57 stone. Stone should be carefully placed so as not to disturb the underlying fabric and geo-grid.

## 3.03 CRUSHED STONE PLACEMENT OVER GEOGRID

**A.** Stone material shall be placed in lifts. Stone shall be placed, spread, and compacted in such a manner that minimizes the development of wrinkles in the geogrid and geotextile and/or movement of the geogrid and geotextile.

**B.** Stone shall be placed on subgrade from the sides and no equipment shall be allowed directly on the geogrid or the stone. The stone shall be installed to the lines, grades and thicknesses indicated on the drawings. Stone base shall be compacted to 90% Standard Proctor or as directed by Engineer.

## 3.04 UNIT PRICE STONE

**A.** Should #57, gabion or rip rap stone be required in an undercut situation, it shall be directed in writing by the Engineer and compensated for in accordance with the unit prices listed on the Bid Form.

**END OF SECTION 02700**

# SECTION 03300

# CAST-IN-PLACE CONCRETE

## PART 1 - GENERAL

### 1.01 SCOPE OF WORK

**A.** This section includes the requirements for all labor, materials, equipment and installation of cast-in-place concrete mat foundation, walls, topping slab (walking slab) and retaining walls as described in these specifications and shown on the drawings.

**B.** All testing indicated in this specification shall be the responsibility of the Contractor and provided by a third party approved by the Owner.

### 1.02 RESPONSIBILITY

**A.** The Contractor shall be solely responsible for the ability of formwork to produce members of the size, shape and exterior finish required for the structural adequacy of the forms to carry construction loads without excessive deflection and for the safe use of forms in connection with completion of the concrete work. The Contractor shall be responsible for any injury or damage arising from inadequate forms or from premature removal of formwork.

**B.** The Contractor shall be solely responsible for the construction of the concrete foundation mat, retaining walls and topping slab. This responsibility shall include, but not be limited to, all dimensional requirements indicated, mixture proportions and materials, overall design strength and adherence to acceptable concrete temperatures.

### 1.03 ACI STANDARDS

**A.** Formwork design, construction and removal shall conform to ACI 318, Building Code Requirements for Reinforced Concrete, latest edition.

### 1.04 ASTM STANDARDS

**A.** American Society for Testing and Materials (Latest Edition)

1. ASTM C 33 Standard Specification for Concrete Aggregates
2. ASTM C 150 Standard Specification for Portland Cement
3. ASTM C 260 Standard Specification for Air-Entraining Admixtures for Concrete
4. ASTM C 494 Standard Specification for Chemical Admixtures for Concrete
5. ASTM C 309 Standard Specification for Liquid Membrane-Forming Compounds for Curing Concrete
6. ASTM C 172 Standard Practice for Sampling Freshly Made Concrete

7. ASTM C 31 Standard Practice for Making and Curing Concrete Test Specimens in the Field
8. ASTM C 143 Standard Test Method for Slump of Hydraulic Cement Concrete
9. ASTM C 39 Standard Test Method for Compressive Strength of Cylindrical Concrete Specimens
10. ASTM C 42 Standard Test Method for Obtaining and Testing Drilled Cores and Sawed Beams of Concrete
11. ASTM C 618 Standard Specification for Coal Fly Ash and Raw or Calcined Natural Pozzolan for Use as a Mineral Admixture in Concrete – Class F Only.

## 1.05 SUBMITTALS

**A.** Delivery Tickets: Batch weight tab should be attached to delivery ticket. Submit delivery tickets in accordance with ASTM C 94 for each batch of ready-mixed concrete. Information on the ticket shall include class of concrete, water content, time of loading, truck number, admixtures, quantity and batch weight tabs and how much water can be added without exceeding the specified water cement ratio.

**B.** Contractor Mix Design: Thirty (30) days minimum prior to concrete placement, submit a mix design for each strength and type of concrete. Furnish a complete list of materials including type, brand, source and amounts. Provide copies of test reports showing that the proposed mix has been successfully tested and used to produce concrete with the properties specified and will be suitable for the job conditions. All mix designs shall include no more than 25% fly ash (Class F only) and a corrosion inhibitor at a minimum rate of 5 gallons per cubic yard or as approved by the Engineer. Submit additional data regarding concrete aggregates if the source of aggregate changes. Contractor shall submit a "pumpable" design mix for use in the field.

**C.** Shop Drawings: Reproductions of contract drawings are unacceptable.

**D.** Shop Drawings for Reinforcing Steel: ACI 315. Indicate bending diagrams, assembly diagrams, splicing and laps of bars, shapes, dimensions and details of bar reinforcing, accessories and concrete cover. Do not scale dimensions from structural drawings to determine lengths of reinforcing rods.

**E.** Certificates of Compliance:

1. Aggregates
2. Admixtures
3. Reinforcement
4. Cement

**F.** Catalog Data:

**1.** Materials for curing concrete

**2.** Joint sealant

**3.** 15 lb. felt

**4.** Epoxy bonding agents

**1.06** Do not deliver concrete until forms, reinforcement, embedded items and chamfer strips are in place, have been inspected and approved by the Engineer and is ready for concrete placement. Engineer shall have a minimum of twenty-four (24) hours advanced notice of any concrete placement.

**1.07** Store reinforcement of different sizes and shapes in separate piles or racks raised above the ground to avoid excessive rusting. Protect from contaminants such as grease, oil and dirt. Provide for accurate identification after bundles are broken and tags removed.

## PART 2 - PRODUCTS

### 2.01 MATERIALS

**A.** Contractor-Furnished Mix Design for concrete: ACI 211.1 and ACI 301. Concrete shall have a minimum 28-day compressive strength specified below. Provide 2.5 to 5 percent air entrainment for concrete exposed to the weather – this does not include the mat foundation slab under the box culvert. Accomplish air entrainment using an air-entraining admixture. Water/cement ratio shall not exceed .44.

| Location | f'c (psi 28 day) | Slump (in) | Air Entrainment |
|---|---|---|---|
| Mat Slab, All Walls* | 4000 | 3 to 5 | None |
| Topping Slab* | 4000 | 3 to 5 | 2.5% to 5% |
| | | | |

* with plasticizer slump shall be 9 inches maximum

**B.** Cement: ASTM C 150, Type I, II or V.

**C.** Water: Water shall be fresh, clean and potable.

**D.** Aggregates

**1.** ASTM C33, except as modified herein. Obtain aggregates for exposed concrete surfaces from one source. Aggregates shall not contain any substance which may be deleteriously reactive with the alkalis in the cement.

2. Aggregate size for mass concrete pours shall confirm to ACI 318 and ACI 207.1R-05.

**E.** Non-Shrink Grout: COE CRD-C-621; Master Builders, "Set Grout", or approved equal.

**F.** Admixtures

1. Air Entraining: ASTM C 260.
2. Accelerating: ASTM C 494, Type C.
3. Retarding: ASTM C 494, Type B, D or G.
4. Water Reducing: ASTM C 494, Type A, E or F.

**G.** Reinforcing Bars: ACI 301 unless otherwise specified. ASTM A 615 (Grade 60) including supplementary requirement S1 with bars marked S.

**H.** Mechanical Reinforcing Bar Connectors: ACI 301. Provide 125 percent minimum yield strength of the reinforcement bar. Provide Lenton Rebar Couplers as indicated and manufactured by Devoran Metals, or approved equal.

**I.** Impervious Sheeting: ASTM C 171; 15 lb. felt, waterproof paper, clear or white polyethylene sheeting, or polyethylene coated burlap.

**J.** Liquid Membrane-Forming Compound: ASTM C 309, white pigmented, Type 2, Class B, free of paraffin or petroleum.

**K.** Expansion/Contraction Premolded Joint Fillers

1. ASTM D 1751 or ASTM D 1752, 1/2 inch thick, unless otherwise indicated with a "zip strip" cap to facilitate caulking.

**L.** Joint Sealants

1. Walls: Vertical Surfaces Greater Than 3 Percent Slope; ASTM C 920, Type M, Grade NS, Class 25, Use T.
2. Slab Joints: ASTM D 6690-15; pedestrian traffic rated; match concrete color.

**M.** Epoxy Bonding Compound

1. ASTM C 881, Type II, Grade 1, Class A (if placement temperature is below 40 degrees F); Class B (if placement temperature is between 40 and 60 degrees F); or Class C (if placement temperature is above 60 degrees F). Provide Grade 1 or 2 for horizontal surfaces and Grade 3 for vertical surfaces.

**N.** Bond Breaker: ASTM D 6757; inorganic shingle underlayment; 15 pound weight.

## PART 3 - EXECUTION

## 3.01 FORMS

**A.** ACI 301. Provide forms, shoring and scaffolding for concrete placement unless indicated or specified otherwise. Set forms mortar tight and true to line and grade. Chamfer exposed joints, edges and external corners of concrete 0.75 inch unless otherwise indicated. Provide formwork with clean-out openings to permit inspection and removal of debris. Forms submerged in water shall be watertight.

**B.** Form Oil Coating: Before concrete placement, coat the contact surfaces of forms with a non-staining mineral oil, non-staining form coating compound or two coats of nitrocellulose lacquer. Do not use mineral oil on forms for surfaces to which adhesive, paint or other finish material is to be applied.

**C.** Removal of Forms: Prevent concrete damage during form removal. After placing concrete, forms shall remain in place for a minimum of twenty-four (24) hours or as approved by the Engineer.

**D.** Reuse of Forms: All forms must be adequately inspected, cleaned and re-oiled prior to reuse. Damaged forms shall be replaced and any patched forms must yield the required final finishes required under this specification.

**E.** Chamfer Strip – a three-fourths (¾) inch chamfer strip will be required to be installed on all exposed edges of concrete.

## 3.02 PLACING REINFORCEMENT AND MISCELLANEOUS MATERIALS

**A.** ACI 301. Provide bars, wire fabric, wire ties, supports and other devices necessary to install and secure reinforcement. Reinforcement shall not contain rust, scale, oil, grease, clay and foreign substances that would reduce the bond. Rusting of reinforcement is a basis of rejection if the effective cross sectional area or the nominal weight per foot of the reinforcement has been reduced to less than specified in paragraph entitled "Reinforcing Bars". Remove loose rust prior to placing steel. Tack welding is prohibited.

**B.** Tolerances: Place reinforcement and secure with non-corrodible chairs, spacers or metal hangers.

**C.** Splicing: AWS D1.4, except as otherwise indicated or specified. Splices shall be approved prior to use. Do not splice at points of maximum stress.

**D.** Cover: ACI 301 for minimum coverage, unless otherwise indicated.

**E.** Setting Miscellaneous Material: Place and secure anchors and bolts, pipe sleeves, conduits and other such items in position before concrete placement. Plumb anchor bolts and check location and elevation. Temporarily fill voids in sleeves with readily removable material to prevent the entry of concrete

**F.** Form Ties and Accessories: The use of wire alone is prohibited. Form ties and accessories shall not reduce the effective cover of the reinforcement.

## 3.03 MEASURING, MIXING, TRANSPORTING AND PLACING CONCRETE

**A.** ASTM C 94, ACI 301, ACI 302.1R, ACI 207.1R-05 and ACI 304, except as modified herein. Provide mandatory batch ticket information for each load of ready mix concrete.

**B.** Measuring: Make moisture, weight and air determination at intervals as specified in paragraph entitled "Sampling and Testing". Allowable tolerances for measuring cement and water shall be 1 percent; for aggregates, 2 percent; and for admixtures, 3 percent.

**C.** Mixing: ASTM C 94. Machine mix concrete. Begin mixing within 30 minutes after the cement has been added to the aggregates. Place concrete within 90 minutes of the addition of mixing water to cement and aggregates. At no time shall ready mix concrete be placed outside of the 90-minute time limit or when the temperature exceeds 90 degrees. In either case the concrete shall be rejected and removed from the site. Additional water may be added, provided that both the specified maximum slump and water cement ratio are not exceeded. If the entrained air content falls below the specified limit, add a sufficient quantity of admixture to bring the entrained air content within the specified limits. Dissolve admixtures in the mixing water and mix in the drum to uniformly distribute the admixture throughout the batch.

**D.** Transporting: Transport concrete from the mixer to the forms as rapidly as practicable. Prevent segregation or loss of ingredients. Clean transporting equipment thoroughly before each batch. Remove concrete which has segregated in transporting and dispose of as directed.

**E.** Placing: Place concrete as soon as practicable after the forms and the reinforcement have been inspected and approved. Do not place concrete when weather conditions prevent proper placement and consolidation; in uncovered areas during periods of precipitation; or in standing water. Prior to placing concrete, remove dirt, construction debris, water, snow and ice from within the forms. Deposit concrete as close as practicable to the final position in the forms. Do not exceed a free vertical drop of 3 feet from the point of discharge.

**1.** Vibration: ACI 301. Furnish sufficient spare vibrators on the job site whenever concrete is placed. Consolidate concrete slabs greater than four (4) inches in depth with high frequency, internal, mechanical vibrating equipment supplemented by hand spading and tamping. Consolidate concrete slabs four (4) inches or less in depth by wood tampers, spading and settling with a heavy leveling straight edge. Operate vibrators with vibratory element submerged in the concrete, with a minimum frequency of not less than 6,000 impulses per minute when submerged.

Do not use vibrators to transport the concrete in the forms. Insert and withdraw vibrators approximately eighteen (18) inches apart. Penetrate the previously placed lift with the vibrator when more than one lift is required. Place concrete in eighteen (18) inch maximum vertical lifts. External vibrators shall be used on the exterior surface of the forms when internal vibrators do not provide adequate consolidation of the concrete.

**2.** Topping Slab (Walking Slab) - After the initial strike off process is completed follow up with a hand tamp (commonly referred to as a jitterbug) to better consolidate the large aggregates under the working surface and allow for better finishing techniques on joinery and broom finishes.

**3.** Application of Epoxy Bonding Compound: Apply a thin coat of compound to dry, clean surfaces. Scrub compound into the surface with a stiff-bristle brush. Place concrete while compound is stringy. Do not permit compound to harden prior to concrete placement. Follow manufacturer's instructions regarding safety and health precautions when working with epoxy-resins.

**F.** Cold Weather: ACI 306R. Provide 50 degrees F minimum concrete temperature. Obtain approval prior to placing concrete when the ambient temperature is below 40 degrees F or when concrete is likely to be subjected to freezing temperatures within twenty-four (24) hours. Cover concrete and provide sufficient heat to maintain 50 degrees F minimum adjacent to both the form work and the structure while curing. Limit the rate of cooling to 5 degrees F in any one hour and 50 degrees F per 24 hours after heat application.

**G.** Hot Weather: ACI 305R. Provide and maintain required concrete temperature using Figure 2.1.5 in ACI 305R to prevent the evaporation rate from exceeding 0.2 pound of water per square foot of exposed concrete per hour. Cool ingredients before mixing or use other suitable means to control concrete temperature and prevent rapid drying of newly placed concrete. Shade the fresh concrete as soon as possible after placing. Start curing when the surface of the fresh concrete is sufficiently hard to permit curing without damage. Provide water hoses, pipes, spraying equipment and water hauling equipment (where work site is remote to water source) to maintain a moist concrete surface through the curing period. Provide burlap cover or other suitable, permeable material with fog spray or continuous wetting of the concrete when weather conditions prevent the use of either liquid membrane curing compound or impervious sheets. For vertical surfaces, protect form from direct sunlight and add water to top of structure once concrete is set.

## 3.04 SURFACE FINISHES

**A.** Mock Up Requirements:

1. Prior to placement of any Topping Slabs (Walking Slab) or Slab on Grade, Contractor shall prepare a mock-up to set the minimum standard of joinery, broom finish and caulking to be followed throughout the life of the project. The size of the mock-up will be 10' wide x 10' long x 4" thick and be finished in accordance with all requirements. All joints abutting the perimeter shall have a 1/4" rolled edge along the zip strip. A series of joints and broom finishes will be introduced into the mock-up panel to portray actual contract requirements, All transverse joints shall be grooved with a "deep bit groover" that will produce a joint that is 1.5" deep x ½" wide and contain a ¼ radius at the top on both sides. The joints down the centerline of the pour shall have a 3/8'x 1" deep rolled edge both side to allow for an appropriate caulk joint when completed. Contractor will be expected to have the adequate tools to meet all joinery and brooming requirements specified and follow all details indicated on the drawings including the installation of expansion joint material and zip strips along the perimeter. This mock-up may be placed directly on the sand beach in a location where it will not be disturbed for the life of the contract. At project completion, or as directed by the engineer, this mock-up will be removed by the contractor Approval of the mock-up panel is condition precedent prior to placement of any Topping Slabs.

**B.** Formed Surfaces:

**1.** As-Cast Smooth Form:

Mat Slab: Form facing material shall produce a smooth, hard, uniform texture on the concrete. Remove fins and other projections. The top of the mat slab shall be a smooth steel troweled surface to the grades indicated on the plans. Contractor understands that the mat slab is sloping and serves as the flow line for the new drainage system; therefore, the finish grades and slopes indicated are highly critical and must be adhered to. Finish grade lines will be checked by the engineer prior to placement. All edges shall be chamfered.

Retaining Walls & Exterior Box Culvert Walls: Form facing material shall produce a smooth, hard, flat, uniform texture on the concrete without unsightly deflections or the need for rubbing and patching to achieve the desired results. Remove fins and other projections immediately upon form removal. Tops of retaining walls shall be finished smooth, flat, and to the grades shown on the drawings with edges chamfered. Tops of box culvert walls shall be finished flat and to the grades ready to receive the elevated top slab.

Topping Slab: Finish shall be a steel troweled finish followed by a light broom

finish transverse to the direction of walking traffic. Contractor acknowledges that the requirements of the mock up panels previously specified which will serve as the minimum standard to be accepted by the Owner. Finished work not meeting these standards will be rejected and removed from the site by the contractor at no additional expense to the Owner.

**C.** Rubbed Finishes and Patching:

1. Provide concrete with a smooth form finishes. Finish as follows:

   a. Smooth Rubbed: Provide on newly hardened concrete within 24 hours following form removal. Wet surfaces and rub with an abrasive tool to produce uniform color and texture. Use only the cement paste drawn from the concrete rubbing process to provide a uniform finish.

   b. Tie Holes – tie holes shall be patched with a sand and cement mixture provided by the Redi-Mix supplier to ensure matching colors. Final finish shall be uniform in color and texture with the surrounding surfaces.

**D.** Defects: Provide edges perpendicular to the surface and patch with non-shrink grout. Patch tie holes and defects when the forms are removed. Concrete with extensive honeycomb (including exposed steel reinforcement, cold joints, entrapped debris, and separated aggregate or other defects) which affect the serviceability or structural strength will be rejected, unless correction of defects is approved. Obtain approval of corrective action prior to repair. The surface of the concrete shall not vary more than the allowable tolerances of ACI 347. Exposed surfaces shall be uniform in appearance and finished to a smooth form finished unless otherwise specified.

## 3.05 CURING AND PROTECTION

**A.** ACI 301 unless otherwise specified. Cure all concrete for a minimum of seven (7) days. Begin curing in conformance with thermal control plan. Protect concrete from injurious action by sun, rain, flowing water, frost, mechanical injury, tire marks and oil stains. Do not allow concrete to dry out from time of placement until the expiration of the specified curing period. If forms are removed prior to the expiration of the curing period, provide another curing procedure specified herein for the remaining period of the curing period.

**B.** Curing of Flatwork: All flatwork must be cured by keeping continuously wet or by use of impervious sheeting. Curing compounds will not be allowed due to the follow on traffic coating that will be applied to the walking surface.

**C.** Moist Curing: Provide for the removal of water without erosion or damage to the structure.

1. Ponding or Immersion: Continually immerse the concrete throughout the curing period. Water shall not be more than 20 degrees F less than the temperature of the concrete. For temperatures between 40 and 50 degrees F, increase the curing period by 50 percent.
2. Fog Spraying or Sprinkling: Provide uniform and continuous application of water throughout the curing period. For temperatures between 40 and 50 degrees F, increase the curing period by 50 percent.
3. Impervious Sheeting: Curing of flatwork must be done with impervious sheeting. Wet the entire exposed surface of the concrete thoroughly with a fine spray of water and cover with impervious sheeting throughout the curing period. Lay sheeting directly on the concrete surface and overlap edges twelve (12) inches minimum. Provide sheeting not less than eighteen (18) inches wider than the concrete surface to be cured. Secure edges and transverse laps to form closed joints. Repair torn or damaged sheeting or provide new sheeting.
4. Salt or brackish water shall not be used in the curing process.

## 3.06 SAMPLING AND TESTING

**A.** Sampling: ASTM C 172. Collect samples of fresh concrete of each mix design to perform tests specified. ASTM C 31 for making test specimens.

**B.** Testing: Provide the following tests:

1. Slump Tests: ASTM C 143. Take concrete samples during concrete placement. The maximum slump may be increased as specified with the addition of an approved admixture provided that the water-cement ratio is not exceeded. Contractor will perform al slump tests at point of placement.
2. Temperature Tests: Test the concrete delivered and the concrete in the forms. Perform tests in hot or cold weather conditions (below 50 degrees F and above 80 degrees F) for each batch (minimum of every ten (10) cubic yards) of concrete, until the specified temperature is obtained, and whenever test cylinders and slump tests are made.
3. Compressive Strength Tests: ASTM C 39. Contractor will make five test cylinders for each set of tests in accordance with ASTM C 31 - two cylinders will be broken at 7 days, two cylinders at 28 days, and hold one cylinder in reserve. Provide concrete cylinders for compressive tests not less than once a day, nor less than once for each 100 cubic yards of concrete. If the average strength of the 28-day test cylinders is less than f'c and a maximum of one single cylinder is less than f'c minus 300 psi, take three ASTM C42 core samples and test. If the average strength of the 28-day test cylinders is less than f'c and two or more cylinders are

less than f'c minus 300 psi, take six core samples and test. Concrete represented by core tests shall be considered structurally adequate if the average of three cores is equal to at least 85 percent of f'c and if no single core is less than 75 percent of f'c. Locations represented by erratic core strengths shall be retested. Remove concrete not meeting strength criteria and provide new, acceptable concrete. Repair core holes with non-shrink grout. Match color and finish of adjacent concrete.

**4.** Air Content: ASTM C 173 or ASTM C 231. Test air-entrained concrete for air content at the same frequency as specified for slump tests.

**END OF SECTION 03300**

# SECTION 03400

# ARCHITECTURAL PRECAST CONCRETE

## PART 1 - GENERAL

### 1.01 SUMMARY

**A.** This section includes the performance criteria, materials, production, and erection of architectural precast concrete for the project. The work performed under this section includes all labor, material, equipment, related services, and supervision required for the manufacture and erection of the architectural precast as shown on the contract drawings.

**B.** This section includes the following:

**1.** Architectural precast concrete benches and firepits including firebrick, fireproof mortar and mosaic tile.

**C.** Related Sections include the following:

**1.** Division 3 Section "Cast-in-Place Concrete".

### 1.02 DEFINITION (not used)

### 1.03 PERFORMANCE REQUIREMENTS

**A.** Structural Performance: Provide architectural precast concrete units and connections capable of withstanding the following design loads within limits and under conditions indicated:

**1.** Dead Loads: panel weight and all materials that bear on them.

**2.** Live Loads: see Drawings.

**3.** Wind Loads: see Drawings.

**4.** Seismic Loads: see Drawings.

**5.** Project Specific Loads: including but not limited to: wave loads (see Drawings for additional loading)

**6.** Thermal Movements: Provide for in-plane thermal movements resulting from annual ambient temperature changes of 80 deg. F. Use other values, greater or smaller, whenever justified by climatic conditions at the project site.

### 1.04 SUBMITTALS

**A.** Product Data: For each type of product indicated. Retain quality control records and certificates of compliance for three (3) years or period of warranty, whichever is greater.

**B.** Design Mixes: For each concrete mix along with compressive strength and water-absorption tests.

**C.** Shop Drawings: Contractor to provide fabrication shop drawings indicating plans, elevations, dimensions, shapes and cross sections. Indicate aesthetic intent including joints, reveals, and extent and location of each surface finish. Indicate details at corners.

**1.** Detail loose and cast-in hardware, and connections.

**2.** Indicate locations, tolerances and details of anchorage devices to be embedded in or attached to structure or other construction.

**3.** Indicate locations and details of precast anchors and joint widths.

**4.** Design Modifications:

**a.** If design modifications are necessary to meet the performance requirements and field conditions, submit design calculations and drawings. Do not adversely affect the appearance, durability or strength of units when modifying details or materials and maintain the general design concept.

**5.** Comprehensive engineering design signed and sealed by the qualified professional engineer responsible for its preparation registered in the state of Mississippi. Show connections, and types of reinforcement, including special reinforcement.

**D.** Sample Panels: Before fabricating architectural precast concrete benches, produce at least one bench as a mock-up to indicate all required contract requirements. Incorporate full scale details of architectural features, finishes, textures, and transitions as directed by the Architect.

**1.** Depending on the quality of the mock-up produced, the Contractor may use it, upon Engineers approval, as finished work in place. If unacceptable, Contractor shall demolish and remove when directed.

**E.** Material Test Reports: From a qualified testing agency indicating and interpreting test results of the following for compliance with requirements indicated:

**1.** Concrete materials.

**2.** Reinforcing materials.

**3.** Admixtures.

## 1.05 QUALITY ASSURANCE

**A.** Fabricator Qualifications: A firm that complies with the following requirements and is experienced in producing architectural precast concrete units similar to those indicated for this Project and with a record of successful in-service performance.

1. Assumes responsibility for engineering architectural precast concrete units to comply with performance requirements. This responsibility includes preparation of Shop Drawings and comprehensive engineering analysis by a qualified professional engineer.
2. Professional Engineer Qualifications: A professional engineer who is legally qualified to practice in jurisdiction where Project is located and who is experienced in providing engineering services of the kind indicated. Engineering services are defined as those performed for installations of architectural precast concrete that are similar to those indicated for this Project in material, design, and extent.
3. Has sufficient production capacity to produce required units without delaying the Work.

**B.** Testing Agency Qualifications: An independent testing agency, qualified according to ASTM C 1077 and ASTM E 329 to conduct the testing indicated, as documented according to ASTM E 548.

**C.** Design Standards: Comply with ACI 318 (ACI 318M) and the design recommendations of PCI MNL 120, "PCI Design Handbook – Precast and Prestressed Concrete," applicable to types of architectural precast concrete units indicated.

**D.** Quality-Control Standard: For manufacturing procedures and testing requirements, quality-control recommendations, and dimensional tolerances for types of units required, comply with PCI MNL 117, "Manual for Quality Control for Plants and Production of Architectural Precast Concrete Products."

**E.** Welding: Qualify procedures and personnel according to AWS D1.1, "Structural Welding Code – Steel"; and AWS D1.1, "Structural Welding Code – Reinforcing Steel."

**F.** Pre-installation Conference: Conduct conference at Engineer's Office, or designated location, to comply with requirements in Section 01 31 00 "Project Management & Coordination".

## 1.06 DELIVERY, STORAGE AND HANDLING

**A.** Store units with adequate dunnage and bracing and protect units to prevent contact with soil, staining, and to prevent cracking, distortion, warping or other physical damage.

**B.** Store units, unless otherwise specified, with non-staining, resilient supports.

**C.** Deliver all architectural precast concrete units to the project site in such quantities and at such times to assure compliance with the agreed project schedule and proper setting sequence so as to limit unloading units temporarily on the ground.

**D.** Handle and transport units in a position consistent with their shape and design in order to avoid excessive stresses which would cause cracking or damage.

**E.** Lift and support units only at designated points shown on the Shop Drawings.

**F.** Place non-staining resilient spacers of even thickness between each unit.

**G.** Support units during shipment on non-staining shock absorbing material.

## 1.07 SEQUENCING

**A.** Furnish loose connection hardware and anchorage items to be embedded in or attached to other construction without delaying the Work. Provide setting diagrams, templates, instructions, and directions, as required, for installation.

# PART 2 - PRODUCTS

## 2.01 MOLD MATERIALS

**A.** Molds: Rigid, dimensionally stable, non-absorptive material, warp and buckle free, that will provide continuous and true precast concrete surfaces within fabrication tolerances indicated; non-reactive with concrete and suitable for producing required finishes.

**1.** Mold-Release Agent: Commercially produced liquid-release agent that will not bond with, stain or adversely affect precast concrete surfaces and will not impair subsequent surface or joint treatments of precast concrete.

## 2.02 REINFORCING MATERIALS

**A.** Low-Alloy-Steel Reinforcing Bars: ASTM A 706/A 706/M, deformed. (Grade 60)

**B.** Steel Bar Mats: ASTM A 184/A 184M, assembled with clips, as follows:

**2.** Steel Reinforcement: ASTM A 706/A 706/M, deformed bars.

**C.** Plain-Steel Welded Wire Reinforcement: ASTM A 185, fabricated from as-drawn steel wire into flat sheets.

**D.** Deformed-Steel Welded Wire Reinforcement: ASTM A 497, flat sheet.

**E.** Thin Slab Coil Inserts: As indicated on drawings.

**F.** Supports: Suspend reinforcement from back of mold or use bolsters, chairs, spacers, and other devices for spacing, supporting, and fastening reinforcing bars and welded wire reinforcement in place according to PCI MNL 117.

## 2.03 CONCRETE MATERIALS

**A.** Portland Cement: ASTM C150, Type I or III.

**1.** For surfaces exposed to view in finished structure, use gray or white cements as needed to match approved sample, same type, brand, and mill source throughout

the precast concrete production.

**B.** Normal-Weight Aggregates: Except as modified by PCI MNL 117, ASTM C 33, with coarse aggregates complying with Class 5S. Provide and stockpile fine and coarse aggregates for each type of exposed finish from a single source (pit or quarry) for entire project.

**C.** Lightweight Aggregates: Except as modified by PCI MNL 117, ASTM C 330 with absorption less than 11 percent.

**D.** Water: Potable; free from deleterious material that may affect color stability, setting, or strength of concrete and complying with chemical limits of PCI MNL 117.

**E.** Water-Reducing Admixture: ASTM C 494/C494M, Type A.

**F.** Retarding Admixture: ASTM C 494/C494M, Type B.

**G.** Water-Reducing and Retarding Admixture: ASTM C 494/C494M, Type D.

**H.** High-Range, Water-Reducing Admixture: ASTM C 494/C494M, Type F.

**I.** High-Range, Water-Reducing and Retarding Admixture: ASTM C 494/C494M, Type G.

**J.** Plasticizing Admixture for Flowable Concrete: ASTM C 1017/C1017M.

**K.** Admixtures containing calcium chloride, or more than 0.15 percent chloride ions or other salts by weight of admixture are not permitted.

## 2.04 ACCESSORIES

**A.** Accessories: Provide clips, hangers, lifting eyes, plastic or steel shims, and other accessories required to handle & install architectural precast concrete units.

## 2.05 GROUT MATERIALS

**A.** Sand–Cement Grout: Portland cement, ASTM C 150, Type 1, and clean, natural sand, ASTM C 144, or ASTM C 404. Mix at ratio of 1 part cement to 2-1/2 parts sand, by volume, with minimum water required for placement and hydration.

**B.** Nonmetallic, Nonshrink Grout: Premixed, nonmetallic, noncorrosive, nonstaining grout containing selected silica sands, Portland cement, shrinkage-compensating agents, plasticizing and water-reducing agents, complying ASTM C 1107, Grade A for drypack and Grades B and C for flowable grout and of a consistency suitable for application within a 30-minute working time.

**C.** Epoxy-resin grout: Two-component mineral-filled epoxy-resin: ASTM C881 of type, grade, and class to suit requirements. Sikadur 32, Hi-Mod Epoxy bonding/grouting adhesive, or approved equal.

## 2.06 CONCRETE MIXES

**A.** Prepare design mixes to match Architect's sample for each type of concrete required.

**B.** Design mixes may be prepared by a qualified independent testing agency or by qualified precast plant personnel at architectural precast concrete fabricator's option.

**C.** Limit water-soluble chloride ions to the maximum percentage by weight of cement permitted by ACI 318 (ACI 318M) or PCI MNL 117 when tested in accordance with ASTM C1218/C1218M.

**D.** Normal-Weight Concrete Face and Backup Mixes: Proportion mixes by either laboratory trial batch or field test data methods according to ACI 211.1, with materials to be used on project, to provide normal-weight concrete with the following properties:

**1.** Compressive Strength (28 Days): 5000 psi.

**2.** Maximum Water-Cementitious Materials Ratio: 0.45.

**E.** Water Absorption: 6 percent by weight or 14 percent by volume, tested according to PCI MNL 117.

**F.** Add air-entraining admixture at manufacturer's prescribed rate to result in concrete at point of placement having an air content complying with PCI MNL 117.

**G.** When included in design mixes, add other admixtures to concrete mixes according to manufacturer's written instructions.

**H.** All mixes must contain a corrosion inhibitor at a minimum dosage of five (5) gallons per cubic yard or as approved by the engineer.

## 2.07 MOLD FABRICATION

**A.** Molds: Accurately construct molds, mortar tight, of sufficient strength to withstand pressures due to concrete-placement and vibration operations and temperature changes. Coat contact surfaces of molds with release agent before reinforcement is placed. Avoid contamination of reinforcement.

**B.** Maintain molds to provide completed architectural precast concrete units of shapes, lines and dimensions indicated, within fabrication tolerances specified.

**1.** Form joints are not permitted on faces exposed to view in the finished work.

**2.** Edge and Corner Treatment: Uniformly chamfered.

## 2.08 FABRICATION

**A.** Cast-in Anchors, Inserts, Plates, Angles, and Other Anchorage Hardware: Fabricate anchorage hardware with sufficient anchorage and embedment to comply with design requirements. Accurately position for attachment of loose hardware and secure in place

during precasting operations. Locate anchorage hardware where it does not affect position of main reinforcement or concrete placement.

1. Weld headed studs and deformed bar anchors used for anchorage according to AWS D1.1 and AWS C5.4, "Recommended Practices for Stud Welding".

**B.** Furnish all loose hardware items including coil inserts, steel plates, clip angles, seat angles, anchors, dowels, cramps, hangers, and other hardware shapes for securing architectural precast concrete units to supporting and adjacent construction.

**C.** Cast-in inserts, reglets, slots, holes, and other accessories in architectural precast concrete units as indicated on contract drawing.

**D.** Reinforcement: All reinforcement shall be epoxy coated. Comply with recommendations in PCI MNL 117 for fabrication, placing, and supporting reinforcement.

1. Clean reinforcement of loose rust and mill scale, earth, and other materials that reduce or destroy the bond with concrete. When damage to epoxy coated reinforcing exceeds limits specified ASTM A775/A775M repair with patching material compatible with coating material and epoxy coat bar ends after cutting.
2. Accurately position, support, and secure reinforcement against displacement during concrete-placement and consolidation operations. Completely conceal support devices to prevent exposure on finished surfaces.
3. Place reinforcing steel to maintain at least two (2) inch minimum concrete cover. Arrange, space, and securely tie bars and bar supports to hold reinforcement in position while placing concrete. Direct wire tie ends away from finished, exposed concrete surfaces.

**E.** Reinforce architectural precast concrete units to resist handling, transportation, and erection stresses.

**F.** Mix concrete according to PCI MNL 117 and requirements in this Section. After concrete batching, no additional water may be added.

**G.** Place concrete in a continuous operation to prevent seams or planes of weakness from forming in precast concrete units. Comply with requirements in PCI MNL 117 for measuring, mixing, transporting, and placing concrete.

1. Place face mixture to a minimum thickness after consolidation of the greater of 1 in. (25 mm) or 1.5 times the nominal maximum aggregate size, but not less than the minimum reinforcing cover as indicated on Contract Drawings.
2. Place backup concrete to ensure bond with face mix concrete.

**H.** Thoroughly consolidate placed concrete by internal and/or external vibration without dislocating or damaging reinforcement and built-in items, and minimize pour lines, honeycombing or entrapped air on surfaces. Use equipment and procedures complying with PCI MNL 117.

**1.** Place self-consolidating concrete without vibration in accordance with PCI Interim Guidelines for the Use of Self-Consolidating Concrete.

**I.** Comply with ACI 306.1 procedures for cold-weather concrete placement.

**J.** Comply with ACI 305R recommendations for hot-weather concrete placement.

**K.** Precast fabricator will be responsible for designing adequate "pick points" for all benches and firepits and the associated field patching to finish flush with the concrete surface and that will match adjacent finishes. Identify pickup points of architectural precast concrete units and orientation in structure with permanent markings, complying with markings indicated on Shop Drawings. Imprint or permanently mark casting date on each architectural precast concrete unit on a surface that will not show in finished structure.

**L.** Cure concrete, according to requirements in PCI MNL 117, by moisture retention without heat or by accelerated heat curing using low-pressure live steam or radiant heat and moisture. Cure units until the compressive strength is high enough to ensure that stripping does not have an effect on the performance or appearance of the final product.

**M.** Repair damaged architectural precast concrete units to meet acceptability requirements of PCI MNL 117.

## 2.09 FABRICATION TOLERANCES

**A.** Fabricate architectural precast concrete units straight and true to size and shape with exposed edges and corners precise and true so each finished unit complies with PCI MNL 117 product tolerances as well as position tolerances for cast-in items.

## 2.10 FINISHES

**A.** Panel faces shall be free of joint marks, grain, and other obvious defects. Corners, including false joints shall be uniform, straight, and sharp. A light acid wash finish shall be applied to all exposed-face surfaces of architectural precast concrete units to match approved sample panels.

**B.** Finish exposed top and sides of panels to match the face finish. Exposed back surfaces of architectural precast concrete units shall have a smooth steel-trowel finish.

## 2.11 SOURCE QUALITY CONTROL

**A.** Quality-Control Testing: Test and inspect precast concrete according to PCI MNL 117 requirements. If using self-consolidating concrete also test and inspect according to PCI Interim Guidelines for the Use of Self-Consolidating Concrete.

**B.** Strength of precast concrete units will be considered deficient if units fail to comply with ACI 318 (ACI 318M) requirements for concrete strength.

**C.** Testing: If there is evidence that the concrete strength of precast concrete units may be deficient or may not comply with ACI 318 (ACI 318M) requirements, Precaster will employ an independent testing agency to obtain, prepare, and test cores drilled from hardened concrete to determine compressive strength according to ASTM C 42/C42M.

**1.** A minimum of three (3) representative cores will be taken from units of suspect strength, from locations directed by Architect.

**2.** Cores will be tested in an air-dry condition.

**3.** Strength of concrete for each series of three (3) cores will be considered satisfactory if the average compressive strength is equal to at least 85 percent of the 28-day design compressive strength and no single core is less than 75 percent of the 28-day design compressive strength.

**4.** Test results will be made in writing on the same day that tests are performed, with copies to Architect, Contractor, and precast concrete fabricator. Test reports will include the following:

**a.** Project identification name and number.

**b.** Date when tests were performed.

**c.** Name of precast concrete fabricator.

**d.** Name of concrete testing agency.

**e.** Identification letter, name, and type of precast concrete units or units represented by core tests; design compressive strength; type of break; compressive strength at breaks, corrected for length-diameter ratio; and direction of applied load to core in relation to horizontal plane of concrete as placed.

**D.** Patching: If core test results are satisfactory and precast concrete units comply with requirements, clean and dampen core holes and solidly fill with precast concrete mix that has no coarse aggregate, and finish to match adjacent precast concrete surfaces.

**E.** Defective Work: Architectural precast concrete units that do not comply with acceptability requirements in PCI MNL 117, including concrete strength, manufacturing tolerances, and color and texture range are unacceptable. Chipped,

spalled or cracked units may be repaired, if repaired units match the visual mock-up. The Architect reserves the right to reject any unit if it does not match the accepted samples and visual mock-up. Replace unacceptable units with precast concrete units that comply with requirements.

## PART 3 - EXECUTION

### 3.01 EXAMINATION

**A.** Examine supporting structural foundation and conditions for compliance with requirements for installation tolerances, true and level bearing surfaces, and other conditions affecting performance. Proceed with installation only after unsatisfactory conditions have been corrected.

**B.** Do not install precast concrete units until supporting cast-in place concrete structural foundation has attained minimum allowable design compressive strength of supporting steel or other structure is structurally ready to receive loads from precast.

### 3.02 ERECTION

**A.** Install loose clips, hangers, bearing pads and other accessories required for connecting architectural precast concrete units to supporting members and backup materials. All precast panels and appurtenances shall be erected by a certified erector that is contracted directly to the precast fabricator.

**B.** Erect architectural precast concrete level, plumb and square within the specified allowable tolerances. Provide temporary supports and bracing as required to maintain position, stability, and alignment of units until permanent connections are completed.

**1.** Install temporary galvanized or plastic spacing shims or bearing pads as precast concrete units are being erected. Tack weld shims to each other to prevent shims from separating.

**2.** Remove projecting lifting devices and patch voids within recessed lifting devices flush with surface to match the adjacent precast concrete surfaces when recess is exposed.

**C.** Connect architectural precast concrete units in position by bolting, welding, grouting, or as otherwise indicated on approved Erection Drawings. Remove temporary shims, wedges, and spacers as soon as practical after connecting and/or grouting are completed.

**D.** At bolted connections, use lock washers, tack welding, or other acceptable means to prevent loosening of nuts after final adjustment.

**E.** Where slotted connections are used, verify bolt position and tightness. For sliding connections, properly secure bolt but allow bolt to move within connection slot.

Grouting Connections: Grout connections where required or indicated. Retain grout in place until hard enough to support itself. Pack spaces with stiff grout material, tamping until voids are completely filled. Place grout to finish smooth, level, and plumb with adjacent concrete surfaces. Promptly remove grout material from exposed surfaces before it affects finishes or hardens.

**F.** Firepits shall have fire brick installed on its interior floor and walls with fireproof mortar. The exterior wall faces shall have mosaic tile installed on them as required by the contract drawings.

## 3.03 ERECTION TOLERANCES

**A.** Erect architectural precast concrete units level, plumb, square, true, and in alignment without exceeding the noncumulative erection tolerances of PCI MNL 117, Appendix I.

## 3.04 REPAIRS

**A.** Repairs will be permitted provided structural adequacy of units and appearance are not impaired.

**B.** Mix patching materials and repair units so cured patches blend with color, texture, and uniformity of adjacent exposed surfaces and show no apparent line of demarcation between original and repaired work.

**C.** Wire brush, clean, and paint damaged prime-painted components with same type of shop primer.

**D.** Remove and replace damaged architectural precast concrete units when repairs do not meet requirements.

## 3.05 WATER REPELLANTS / ANTI GRAFFITI COATINGS: (not used)

## 3.06 CLEANING & PATCHING

**A.** Clean all surfaces of precast concrete to be exposed to view, as necessary, prior to shipping.

**B.** Clean exposed surfaces of precast concrete units after erection and completion of joint treatment to remove weld marks, other markings, dirt, and stains.

**1.** Perform cleaning procedures, if necessary, according to precast concrete fabricator's recommendations. Clean soiled precast concrete surfaces with detergent and water using stiff fiber brushes and sponges, and rinse with clean water. Protect other work from staining or damage due to cleaning operations.

**2.** Do not use cleaning materials or processes that could change the appearance of exposed concrete finishes or damage adjacent materials.

**C.** Only minor patching will be allowed in the field and all patching will be required to be completed by the precast manufacturer. Final patches will ultimately be approved by the Engineer or Architect. Failure to achieve approval will result in rejection of the panel, or panels, in question.

**END OF SECTION 0340**

# SECTION 05120

# STRUCTURAL STEEL

## PART 1 - GENERAL

### 1.01 DESCRIPTION OF WORK

A. The work includes the fabrication, erection, and hot dipped galvanizing of structural steel. Provide in accordance with AISC "Manual of Steel Construction" except as specified herein. In the AISC "Manual of Steel Construction" referred to herein, the "Specification for Structural Steel Buildings," the "Code of Standard Practice for Steel Buildings and Bridges," and "Specification for Structural Joints Using High Strength Bolts" shall be considered a part thereto.

### 1.02 RELATED WORK SPECIFIED ELSEWHERE

A. Section 09970 – Steel Coatings

### 1.03 SUBMITTALS

A. Shop Drawings: Submit drawings prior to fabrication. Prepare in accordance with the AISC 326 "Detailing for Steel Construction" and AISC 325, "Manual of Steel Construction." Shop drawings shall not be reproductions of contract drawings, or electronic data files if supplied. Include complete information for the fabrication and erection of the structure's components, including the location, type, and size of bolts, welds, member sizes and lengths, connection details, blocks, copes, and cuts. Use AWS standard welding symbols. Fabrication drawings shall be signed and sealed by a Professional Engineer registered in the state of Mississippi.

B. Erection Plan: Submit for record purposes. Indicate the sequence of erection, temporary shoring and bracing, and a detailed sequence of welding, including each welding procedure required. Erection drawings shall be signed and sealed by a Professional Engineer registered in the project state.

C. Certificates of Compliance:

1. Steel
2. Bolts, nuts, and washers
3. Welding electrodes and rods
4. Nonshrink grout
5. Galvanizing
6. AISC fabrication plant quality certification
7. AISC erector quality certification

D. Welder, Welding Operation, and Tacker Qualification: Prior to welding, submit certification for each stating the type of welding and positions qualified for, the code and procedure qualified under, date qualified, and the firm and individual certifying the qualification tests. Conform to all requirements specified in AWS D1.1.

E. Inspector Qualifications: Submit certification documents for each inspector and each procedure.

**1.04 DELIVERY AND STORAGE**

A. Handle, store, and protect materials in accordance with the manufacturer's recommendations. Replace damaged items with new items, or repair as required by the Architect.

**1.05 REGULATORY REQUIREMENTS**

A. Comply with State and Local regulations regarding release to atmosphere of volatile organic (VOC) and proper disposal of excess and waste materials.

**PART 2 - PRODUCTS**

**2.01 STEEL**

A. Structural Steel: ASTM A 992 (Fy = 50 ksi) for all wide flange shapes. ASTM A 572 (Fy = 50 ksi) for HP shapes, ASTM A36(FY=36KSI) for M, S, C, MC and L Shapes.

B. Structural Steel Tubing: ASTM A 500, Grade B, (Fy=42 for round, Fy=46 for rectangular)

C. Plates and Bars: ASTM A36 (Fy = 36)

**2.02 BOLTS, NUTS, AND WASHERS**

A. Provide the following unless indicated otherwise.

B. Structural Steel:

1. Bolts: ASTM A 325, Type 1, for conventional bolts ASTM F1852, Type 1, for tension control bolts
2. Nuts: ASTM A 563, Grade A, Heavy Hex style.
3. Washers: ASTM F844.

C. Anchor Bolts:

1. Anchor Bolts: ASTM 1554, Grade 55
2. Nuts: ASTM A563, Grade A, Heavy Hex Style
3. Washers: ASTM F844

**2.03 SHOP PAINTING (not used)**

**2.04 HOT DIPPED GALVANIZING**

A. ASTM A123 or F2329, as applicable, unless specified otherwise.

B. Galvanizing Repair Paint: ASTM A123 or F 2329.

**2.05 STRUCTURAL STEEL ACCESSORIES**

A. Welding Electrodes and Rods: AWS D1.1.

B. Nonshrink Grout: ASTM C1107, with no ASTM C827 shrinkage. Grout shall be nonmetallic.

**PART 3 - EXECUTION**

**3.01 FABRICATION**

A. Markings: Prior to erection, members shall be provided with a painted erection mark. In addition, connecting parts assembled in the shop for reaming holes in field connections shall be match marked with scratch and notch marks. Do not locate erection markings on areas to be welded. Do not locate match markings in areas that will decrease member strength or cause stress concentrations.

B. Hot Dipped Galvanizing: Provide full immersion of all tubing to ensure galvanizing on all interior and exterior surfaces of the steel. Fabricator shall fabricate all members to the largest extent possible and then ship to the galvanizer. All galvanizing shall occur after fabrication where practicable.

   1. Galvanizing Repair: ASTM A780, using galvanizing repair paint for galvanizing damaged by handling, transporting, cutting, welding, or bolting. Do not heat surfaces that repair paint has been applied to.

C. Bearing Surfaces and Friction Type Joints: In the shop, coat with a temporary rust preventive. Remove coating, as recommended by the coating manufacturer, immediately prior to field erection.

D. Fabricator to provide drainage holes/slots at the end of beams where required to eliminate water traps. Location must not affect structural integrity.

**3.02 ERECTION**

A. Erection of structural steel, except as indicated in item B. below, must be in accordance with the applicable provisions of AISC 325.

B. For low-rise structural steel buildings (60 feet tall or less and a maximum of 2 stories), the structure must be erected in accordance with AISC DESIGN GUIDE 10.

C. After final positioning of steel members, provide full bearing under base plates and bearing plates using nonshrink grout. Place nonshrink grout in accordance with the manufacturer's instructions.

   1. Storage: Material must be stored out of contact with the ground in such manner and location as will minimize deterioration.

**3.03 CONNECTIONS:** Except as modified in this section, connections not detailed must be designed in accordance with AISC 360. Build connections into existing work. Do not tighten anchor bolts set in concrete with impact torque wrenches. Holes must not be cut or enlarged by burning. Bolts, nuts, and washers must be clean of dirt and rust, and lubricated immediately prior to installation.

A. High-strength Bolts: Provide direct tension indicator washers in all ASTM A325 and ASTM A490 bolted connections. Bolts must be installed in connection holes and initially brought to a snug tight fit. After the initial tightening procedure, bolts must then be fully tensioned, progressing from the most rigid part of a connection to the free edges.

B. Tension Control Bolts: Bolts must be installed in connection holes and initially brought to a snug tight fit. After the initial tightening procedure, bolts must then be fully tensioned, progressing from the most rigid part of a connection to the free edges.

**3.04 GAS CUTTING**

A. Use of gas-cutting torch in the field for correcting fabrication errors will not be permitted on any major member in the structural framing. Use of a gas-cutting torch will be permitted on minor members not under stress only after approval has been obtained from the Architect.

**3.05 WELDING**

A. Welding must be in accordance with AWS D1.1. Provide AWS D1.1 qualified welders, welding operators, and tackers.

B. Develop and submit the Welding Procedure Specifications (WPS) for all welding, including welding done using prequalified procedures. Prequalified procedures may be submitted for information only; however, procedures that are not prequalified must be submitted to Architect.

1. Removal of Temporary Welds, Run-Off Plates, and Backing Strips:

a. Remove only from finished areas.

**3.06 GALVANIZING REPAIR:** Repair damage to galvanized coatings using ASTM A780 zinc rich paint for galvanizing damaged by handling, transporting, cutting, welding, or bolting. Do not heat surfaces to which repair paint has been applied.

**3.07 FIELD QUALITY CONTROL:** Perform field tests, and provide labor, equipment, and incidentals required for testing. The Architect must be notified in writing of defective welds, bolts, nuts, and washers within 7 working days of the date of the test.

A. Welds:

1. Visual Inspection:
2. AWS D1.1. Furnish the services of AWS-certified welding inspectors for fabrication and erection inspection and testing and verification inspections.
3. Inspection by the inspector will include proper preparation, size, gaging location, and acceptability of welds; identification marking; operation and current characteristics of welding sets in use.

4. Nondestructive Testing: Nondestructive testing must be in accordance with AWS D1.1. Test locations must be selected by the Architect. If more than 20 percent of welds made by a welder contain defects identified by testing, then all welds made by that welder must be tested by ultrasonic testing. When all welds made by an individual welder are required to be tested, magnetic particle testing must be used only in areas inaccessible to ultrasonic testing. Retest defective areas after repair. Submit weld inspection reports.

   Testing frequency: Provide the following types and number of tests:

| Test type | Number of Tests |
|---|---|
| Ultrasonic | 25% of moment connections and full penetration welds |
| | |
| | |

B. High-Strength Bolts

1. Testing Bolt, Nut, and Washer Assemblies: Test a minimum of 3 bolt, nut, and washer assemblies from each mill certificate batch in a tension measuring device at the job site prior to the beginning of bolting start-up. Demonstrate that the bolts and nuts, when used together, can develop tension not less than the provisions specified in AISC 360, depending on bolt size and grade. The bolt tension must be developed by tightening the nut. A representative of the manufacturer or supplier must be present to ensure that the fasteners are properly used, and to demonstrate that the fastener assemblies supplied satisfy the specified requirements. Submit bolt testing reports.

2. Inspection:

   a. Inspection procedures must be in accordance with AISC 360. Confirm and report to the Architect that the materials meet the project specification and that they are properly stored. Confirm that the faying surfaces have been properly prepared before the connections are assembled. Observe the specified job site testing and calibration, and confirm that the procedure to be used provides the required tension. Monitor the work to ensure the testing procedures are routinely followed on joints that are specified to be fully tensioned.

   b. Inspect calibration of torque wrenches for high-strength bolts.

3. Testing: The Architect has the option to perform nondestructive tests on 5 percent of the installed bolts to verify compliance with pre-load bolt tension requirements. Provide the required access for the Architect to perform the tests. The nondestructive testing will be done in-place using an ultrasonic measuring device or any other device capable of determining in-place pre-load bolt tension. The test locations must be selected by the Architect. If more than 10 percent of the bolts tested contain defects identified by testing, then all bolts used from the batch from which the tested bolts were taken, must be tested at the Contractor's expense. Retest new bolts, after installation, at the Contractor's expense.

**3.08 ARCHITECT'S REVIEW:** After completion of erection, Contractor's testing and Notification to Architect but before work is covered up, Architect must be given 5 working days to review all structural steel. Failure by the Contractor to provide such review period shall be cause for rejection of all work.

**END OF SECTION 05120**

# SECTION 05520

# PIPE AND TUBE RAILINGS

## PART 1 - GENERAL

### 1.01 SUMMARY

**A.** Section Includes:

**1.** Aluminum tube railings.

### 1.02 ACTION SUBMITTALS

**A.** Product Data: For the following:

**1.** Manufacturer's product lines of mechanically connected railings.

**2.** Railing brackets.

**3.** Grout, anchoring cement, and paint products.

**B.** Shop Drawings: Include plans, elevations, sections, details, and attachments to other work.

**C.** Samples: For each type of exposed finish required.

### 1.03 INFORMATIONAL SUBMITTALS

## PART 2 - PRODUCTS

### 2.01 MANUFACTURERS

**A.** Aluminum Pipe and Tube Railings:

**1.** Basis-of-Design Product: Subject to compliance with requirements, provide Deck-Rail, Aluminum Flat Bar or comparable product.

### 2.02 PERFORMANCE REQUIREMENTS

**A.** Structural Performance: Railings, including attachment to building construction, shall withstand the effects of gravity loads and the following loads and stresses within limits and under conditions indicated:

**1.** Handrails and Top Rails of Guards:

**a.** Uniform load of 50 lb./ ft. applied in any direction.

**b.** Concentrated load of 200 lb./ft. applied in any direction.

**c.** Uniform and concentrated loads need not be assumed to act concurrently.

**2.** Infill of Guards:

**a.** Concentrated load of 50 lb./ft. applied horizontally on an area of 1 sq. ft..

**b.** Infill load and other loads need not be assumed to act concurrently.

## 2.03 METALS, GENERAL

**A.** Brackets, Flanges, and Anchors: Cast or formed metal of same type of material and finish as supported rails unless otherwise indicated.

**1.** Provide type of bracket with flange tapped for concealed anchorage to threaded hanger bolt and that provides 1-1/2-inch clearance from inside face of handrail to finished wall surface.

## 2.04 ALUMINUM

**A.** Aluminum, General: Provide alloy and temper recommended by aluminum producer and finisher for type of use and finish indicated, and with not less than the strength and durability properties of alloy and temper designated below for each aluminum form required.

**B.** Extruded Bars and Tubing: ASTM B 221, Alloy 6063-T5/T52.

**C.** Drawn Seamless Tubing: ASTM B 210, Alloy 6063-T832.

**D.** Plate and Sheet: ASTM B 209, Alloy 6061-T6.

**E.** Die and Hand Forgings: ASTM B 247, Alloy 6061-T6.

**F.** Castings: ASTM B 26/B 26M, Alloy A356.0-T6.

## 2.05 FASTENERS

**A.** General: Provide the following:

**1.** Aluminum Railings: Aluminum fasteners.

## 2.06 MISCELLANEOUS MATERIALS

**A.** Nonshrink, Nonmetallic Grout: Factory-packaged, nonstaining, noncorrosive, nongaseous grout complying with ASTM C 1107/C 1107M. Provide grout specifically recommended by manufacturer for interior and exterior applications.

## 2.07 FABRICATION

**A.** Cut, drill, and punch metals cleanly and accurately. Remove burrs and ease edges to a radius of approximately 1/32 inch unless otherwise indicated. Remove sharp or rough areas on exposed surfaces.

**B.** Form work true to line and level with accurate angles and surfaces.

**C.** Nonwelded Connections: Connect members with concealed mechanical fasteners and fittings. Fabricate members and fittings to produce flush, smooth, rigid, hairline joints.

**D.** Form changes in direction by bending by inserting prefabricated elbow fittings.

**E.** Close exposed ends of railing members with prefabricated end fittings.

**F.** Provide wall returns at ends of wall-mounted handrails unless otherwise indicated.

**G.** Brackets, Flanges, Fittings, and Anchors: Provide wall brackets, flanges, miscellaneous fittings, and anchors to interconnect railing members to other work unless otherwise indicated.

**H.** The top rail shall be turned on an angle to prevent a flat sitting surface for humans or drinks.

## 2.08 ALUMINUM FINISHES

**A.** Appearance of Finished Work: Variations in appearance of abutting or adjacent pieces are acceptable if they are within one-half of the range of approved Samples. Noticeable variations in the same piece are unacceptable. Variations in appearance of other components are acceptable if they are within the range of approved Samples and are assembled or installed to minimize contrast.

**B.** Handrail finish shall be brushed aluminum or equal as approved by the Architect.

1. Color and Gloss: As selected by Architect from manufacturer's full range.

# PART 3 - EXECUTION

## 3.01 INSTALLATION, GENERAL

**A.** Set railings accurately in location, alignment, and elevation; measured from established lines and levels and free of rack.

**1.** Do not weld, cut, or abrade surfaces of railing components that are coated or finished after fabrication and that are intended for field connection by mechanical or other means without further cutting or fitting.

**2.** Set posts plumb within a tolerance of 1/16 inch in 3 feet.

**3.** Align rails so variations from level for horizontal members and variations from parallel with rake of steps and ramps for sloping members do not exceed 1/4 inch in 12 feet.

**B.** Control of Corrosion: Prevent galvanic action and other forms of corrosion by insulating metals and other materials from direct contact with incompatible materials.

1. Coat, with a heavy coat of bituminous paint, concealed surfaces of aluminum that are in contact with grout, concrete, masonry, wood, or dissimilar metals.

## 3.02 ANCHORING POSTS

**A.** Form or core-drill holes not less than 5 inches deep and 3/4 inch larger than OD of post for installing posts in concrete. Clean holes of loose material, insert posts, and fill annular space between post and concrete with nonshrink, nonmetallic grout or anchoring cement, mixed and placed to comply with anchoring material manufacturer's written instructions. The finished grout shall be tapered upwards to prevent puddling water to rest around the post.

## 3.03 ADJUSTING AND CLEANING

**A.** Defective railing components to be replaced before final cleaning.

**END OF SECTION 05520**

# SECTION 06121

# STRUCTURAL GLUE-LAMINATED TIMBER

## PART 1 - GENERAL

### 1.01 QUALITY ASSURANCE

A. Standards: Materials and manufacturer of members shall conform to PS 56 "Structural Glue-Laminated Timber" and ANSI/AITC Standard A190.1, 1992, "Structural Glue-Laminated Timber".

B. Acceptable Manufacturers: Members shall be produced by an AITC licensed firm and factory marked with the AITC "Quality Inspection" marks.

### 1.02 SUBMITTALS

A. Shop Drawings: Submit shop drawings to the Architect in accordance with the General Conditions and General Requirements. Shop drawings shall show full dimensions of each member, layout of entire structural system, and details of connections, connectors and other accessories. Indicate stress grade of lumber, type of glue and other variables in the required work.

### 1.03 DELIVERY, STORAGE AND HANDLING

A. During delivery, storage, handling and erection, keep glue-laminated members dry by maintaining the factory-applied protective covering in weather-tight condition until the building enclosure is complete. Do not store laminated members in areas with either excessively high or low relative humidity in accordance with the manufacturer's instructions.

## PART 2 - PRODUCTS

### 2.01 MATERIALS

A. Lumber and exposed laminating shall be Southern Pine, meeting the structural requirements and laminating specifications of PS 56-73 and shall be of such stress grade to provide glue-laminating members with allowable stress of 2,200 psi in bending, 1,600 psi in tension, and 1,500 psi in compression parallel to grain for dry conditions of service.

B. Manufacture: Materials, manufacturer and quality control shall be in conformance with

"Voluntary Project Standard PS 56-73", "Structural Glue-Laminated Timber" (ANSI A190.1), AITC 100, AITC 117-71, and AITC 200 providing allowable design values as called for on the drawings or specified herein. Laminating combinations shall meet the requirements of Wet Use Conditions of Service for all members exposed to weather. Members shall be marked with a quality mark and a Certificate of Conformance with these requirements shall be furnished.

C. Adhesives for laminating shall meet the requirements for Wet Use Conditions of Service. All adhesives shall be waterproof.

D. Appearance of members shall be architectural grade comply with AITC 110-71.

E. Preservative Treatment of Members: After laminating, dressing, sanding and end-cutting to final size and shape, pressure-treat members with preservative treatment solution free of water repellents and other substances which will interfere with the application of finishes in accordance with AWPA Standard C-29 with chemical retention in wood of .3 lbs. Per cubic foot.

F. Protection of Members: members shall be individually wrapped. Coat ends with sealer after trimming. Surface shall be sealed with one coat penetrating sealer factory applied.

G. Finish Staining and Clear Coat of Members: members shall be factory finished in accordance with the Architectural drawings.

## 2.02 HARDWARE AND ACCESSORIES

A. The fabricator shall furnish connection steel and hardware for joining timber members to each other and to their supports unless otherwise indicated on the drawings. Metal shapes shall have one coat of shop-applied rust inhibitive paint.

B. All decking shall be screwed in place using 316 stainless steel screws sized appropriately and as recommended by the manufacturer.

# PART 3 - EXECUTION

## 3.01 INSTALLATION OF GLUE-LAMINATED TIMBER DECKING

A. Installation shall comply with AITC 105 "Recommended Practice for the Erection of Structural Timber Framing".

B. Temporarily support members with protective blocking and sling to prevent surface damage which will be visible after completion of work.

C. Do not remove wrapping on individually wrapped members until it will serve no useful purpose, including protection from the weather soiling and damage from the work of other trades.

D. Repair damaged surfaces and finishes after completion of erection and removal of

wrapping, or replace damaged members where damage is beyond repair.

## 3.02 INSTALLATION OF LAMINATED TIMBER DECKING

A. Decking shall be installed in a standard controlled random lay up continuous over three or more equal spans with the distance between end joints in adjacent courses a minimum of four feet. Joints within 6 inches of being in line each way must be separated by two intervening courses. Each piece must rest on at least two supports. Screw each course to each support in accordance with manufacturers recommendations or as directed by the structural engineer. Screws in adjacent rows shall be staggered 15 inches apart.

**END OF SECTION 06121**

# SECTION 074113

# METAL ROOFING AND ANCILLARY SYSTEMS

## PART 1 - GENERAL

### 1.01 RELATED DOCUMENTS

**A.** Drawings and general provisions of the Contract, including General and Supplementary Conditions and Division 1 Specification Sections, apply to this Section.

### 1.02 SUMMARY

**A.** This Section to provide the Project's Metal Roofing and Ancillary Systems; an assemblage of factory-formed and field-installed products, components, materials, and accessories necessary for a complete weathertight and thermally enhanced covering and rain drainage system for designated building units.

**B.** The Metal Roofing and Ancillary Systems for this Project include, but are not limited to, the following: roof panels, fasciae, trim, closures, flashings, counter flashings, gutters, downspouts, soffit panels, sealants, miscellaneous metal framing and support members, attachment and anchorage devices, and thermal insulation.

### 1.03 DEFINITIONS

**A.** Steel Sheet Thickness: Minimum thickness of base metal without metallic coatings or painted finishes.

### 1.04 PERFORMANCE REQUIREMENTS

**A.** General: Provide metal roof panel assemblies that comply with performance requirements specified as determined by testing manufacturers' standard assemblies similar to those indicated for this Project, by a qualified testing and inspecting agency.

**B.** Air Infiltration: Air leakage through assembly of not more than 0.06 cfm/sq. ft. of roof area when tested according to ASTM E 1680.

**C.** Water Penetration through Roofing, Fascia System, Rain Drainage System: No water penetration when tested according to ASTM E 331.

**D.** Wind-Uplift Resistance: To comply with design criteria as noted on Structural Drawing Sheets S-001 and S-002.

**E.** Thermal Movements: Provide metal roof panel assemblies that allow for thermal movements resulting from the following maximum change (range) in ambient and surface temperatures by preventing buckling, opening of joints, overstressing of components, failure of joint sealants, failure of connections, and other detrimental effects. Base engineering calculation on surface temperatures of materials due to both solar heat gain and nighttime-sky heat loss.

**F.** Temperature Change (Range): 120 deg F, ambient; 180 deg F, material surfaces.

**G.** Thermal Performance: Provide insulated metal roof panel assemblies with thermal-resistance value (R-value) indicated when tested according to ASTM C 236 or ASTM C 518.

**H.** Metal Finish: Conform to all tests for adhesion, flexibility and longevity as specified by Kynar 500.

## 1.05 SUBMITTALS

**A.** Product Data: Include construction details, material descriptions, dimensions of individual components and profiles, and finishes for each type of metal roof panel and accessory.

**B.** Shop Drawings: Show fabrication and installation layouts of metal roof panels; details of roof overhangs, edge conditions, joints, panel profiles, corners, anchorages, trim, flashings, closures, and accessories; and special details. Distinguish between factory- and field-assembled work.

1. Accessories: Include details of the following items, at a scale of not less than 1- ½ inches per 12 inches:
   a. Flashing and trim.
   b. Gutters.
   c. Downspouts.
2. For installed products indicated to comply with design loads, include structural analysis data signed and sealed by the qualified professional engineer responsible for their preparation.

**C.** Coordination Drawings: Roof plans drawn to scale and coordinating penetrations and roof-mounted items. Show the following:

1. Roof panels and attachments.
2. Roof-mounted items including roof hatches, equipment supports, pipe supports and

penetrations, lighting fixtures, snow guards, and items mounted on roof curbs.

**D.** Samples for Initial Color selections: Provide actual samples (not less than fourteen) of manufacturer's standard Kynar 500 colors. Architect reserves the right to select two standard colors and up to four [**Custom**] colors with possibilities such as one color for Roof Panels, one color for Rain Drainage System (gutters and downspouts), one color for Soffits, one color for Fascias (where Rain Drainage System does not occur).

1. Include similar Samples of trim and accessories involving color selection.

**E.** Component Samples for Verification: Provide, as indicated below, for component construction, workmanship, size, configuration, and finishes:

1. Metal Roof and Soffit Panels: 12 inches long by actual panel width. Include fasteners, clips, closures, sealant, and other accessories.
2. Fascia, Trim, and Closures: 12 inches long. Include fasteners and other exposed accessories.
3. Gutter and connected Downspout: 12 inches long for each. Downspout to have 45 degree bottom. Include fasteners, sealant, and other exposed accessories, such as wall and roof straps. Gutter Lap: 12 inches. Include fasteners, sealant, and other exposed accessories.

**F.** Qualification Data: For Installer.

**G.** Material Certificates: For metal material and thermal insulation, signed by manufacturers.

**H.** Product Test Reports: Based on evaluation of comprehensive tests of current products.

**I.** Maintenance Data: For metal roof panels to include in maintenance manuals.

**J.** Warranties: Special warranties specified in this Section.

## 1.06 QUALITY ASSURANCE

**A.** Manufacturer: Company regularly engaged in types of work required by this Section and with minimum ten (10) years documented satisfactory experience with minimum ten (10) comparable projects and approved by Architect.

**B.** Installer Qualifications: Erection Employees of the Roof System Manufacturer or a Company capable of performing work of this Section and with minimum five (5) years documented satisfactory experience with minimum five (5) comparable projects and acceptable to the Roof System Manufacturer.

**C.** Testing Agency Qualifications: Qualified according to ASTM E 329 for testing indicated, as documented according to ASTM E 548.

**D.** Source Limitations: Obtain all exposed Metal Roof System components, including, but not limited to, roof panels, trim, fascia, closures, gutters, and downspouts through one source from a single manufacturer. All secondary components shall be approved by Roof System Manufacturer for use in Metal Roof System Work.

**E.** Product Options: Drawings indicate size, profiles, and dimensional requirements of metal roof panels and are based on the specific system indicated. Refer to Division 1 Section "Product Requirements."

1. Do not modify intended aesthetic effects, as judged solely by Architect, except with Architect's approval. If modifications are proposed, submit comprehensive explanatory data to Architect for review.

**F.** Pre-installation Conference: Conduct conference at Project site to comply with requirements in Division 1 Section "Project Management and Coordination." Review scheduling, methods and procedures related to installation of metal roof system components and assemblies, and other pertinent items.

1. Meet with Owner, Architect, Owner's insurer if applicable, testing and inspecting agency representative, metal roof panel Installer, metal roof system manufacturer's representative, deck Installer, and installers whose work penetrates, interfaces with, or affects metal roof system work including installers of roof accessories and roof-mounted equipment.
2. Review governing regulations and requirements for insurance, certificates, and testing and inspecting if applicable.
3. Review temporary protection requirements for metal roof panel assembly during and after installation.
4. Review roof observation and repair procedures after metal roof system installation.
5. Document proceedings, including corrective measures and actions required, and furnish copy of record to each participant.

## 1.07 DELIVERY, STORAGE, AND HANDLING

**A.** Deliver metal roof system products, components, sheets, metal roof panels, and other manufactured items so as not to be damaged or deformed. Package metal roof system components and materials for protection during transportation and handling.

**B.** Unload, store, and erect metal roof system products in a manner to prevent bending, warping, twisting, and surface damage.

**C.** Stack metal roof panels on platforms or pallets, covered with suitable weathertight and ventilated covering. Store metal roof system products to ensure dryness. Do not store metal roof panels in contact with other materials that might cause staining, denting, or other surface damage.

**D.** Protect strippable protective covering on metal roof system products from exposure to sunlight and high humidity, except to extent necessary for period of metal roof system installation.

## 1.08 PROJECT CONDITIONS

**A.** Weather Limitations: Proceed with installation only when existing and forecasted weather conditions permit assembly of metal roof panels to be performed according to manufacturers' written instructions and warranty requirements.

**B.** Field Measurements: Verify locations of roof framing and roof opening dimensions by field measurements before metal roof panel fabrication and indicate measurements on Shop Drawings.

1. Established Dimensions: Where field measurements cannot be made without delaying the Work, either establish framing and opening dimensions and proceed with fabricating metal roof panels without field measurements, or allow for field-

   trimming of panels. Coordinate roof construction to ensure that actual building dimensions, locations of structural members, and openings correspond to established dimensions.

## 1.09 COORDINATION

**A.** Coordinate installation of roof curbs, equipment supports, and roof penetrations, which are specified in Division 7 Section "Roof Accessories."

**B.** Coordinate metal panel roof assemblies with rain drainage work, flashing, trim, and construction of other adjoining work to provide a leakproof, secure, and noncorrosive installation.

## 1.10 WARRANTY

**A.** General Warranty: The Special Warranties specified below shall not deprive the Owner of other rights the Owner may have under other provisions of the Contract Documents and shall be in addition to, and run concurrent with, other warranties made by the Contractor under requirements of the Contract Documents.

**B.** Special Finish Warranty: Submit a written warranty executed by Roof System Manufacturer with coverage for failure of the factory-applied Kynar 500 finish on exposed Metal Roof System components within the specified warranty period and agreeing to repair finish or replace components that show evidence of deterioration.

1. Deterioration of finish includes, but is not limited to: color face, chalking, cracking, peeling, and loss of film integrity.
2. Finish Warranty Period: Fifteen years from date of Substantial Completion.

**C.** Special Weathertightness Warranty: Submit a written warranty executed by Roof System Manufacturer with coverage for failure of the Metal Roof System to remain weathertight (including free from rain and snow leaks), within specified warranty period and agreeing to repair or replace components, including underlying substrates, which are damaged as a result of any failure to remain weathertight.

1. Weathertight Warranty Period: Five years from date of Substantial Completion.

## PART 2 - PRODUCTS

### 2.01 METAL ROOF SYSTEM - GENERAL

**A.** Design Criteria: The Project's Metal Roof System is based on the system named below and on the roof panels of that system as the primary roof covering. Except as otherwise indicated, all other products, components, and materials required for the Project's completed Metal Roof System are based on the standard products, components, and materials manufactured by or supplied (as secondary products) with the approval of the Basis-of-Design Manufacturer.

### 2.02 SELECTED SYSTEM

**A.** Basis-of-Design Manufacturer: Architectural Building Components (ABC).

**B.** Basis-of Design System: ABC "JSM 200" System Standing Seam Metal Roof Panels.

**C.** Other Acceptable Manufacturers: Subject to compliance with requirements, other manufacturers offering comparable Metal Roof Systems that may be incorporated into the Work include, but are not limited to, the following:

1. AEP-Span.
2. ATAS International, Inc.
3. Berridge Manufacturing Company.
4. Copper Sales, Inc.
5. MBCI; Div. of NCI Building Systems.
6. McElroy Metal, Inc.

7. Merchant & Evans, Inc.
8. Metal-Fab Manufacturing, LLC.
9. Metal Sales Manufacturing Corporation.
10. Morin Corporation; a Metecno Group Company.

## 2.03 STANDING SEAM METAL ROOF PANELS

**A.** General: Provide factory-formed metal roof panels designed to be field assembled by lapping and interconnecting raised side edges of adjacent panels with joint type indicated and mechanically attaching panels to supports using concealed clips in side laps. Include clips, cleats, pressure plates, and accessories required for weathertight installation.

1. Steel Panel Systems: Unless more stringent requirements are indicated, comply with ASTM E 1514.

**B.** Description: Factory roll-formed, channel-shaped, interlocking 22 gauge, steel panels, UL-580 Class 90 rated, 2 inches high straight leg (with inverted "J") edges x 18 inches wide, with factory notching and hemming, factory applied seam sealant, and factory prefinished smooth fluorocarbon coating (Kynar 500). Panels are designed for mechanical seaming in Field to Single Lock Seam configuration.

**C.** Material: Galvalume coated sheet steel, type AZ 50, Grade 50 as described in ASTM 792, 22 gauge.

**D.** Finish:

1. For Exposed Metal Surfaces: PPG 70 percent Kynar 500 with surface dry film thickness (DFT) of 0.80 mil to 0.90 mil over 0.20 to 0.25 mil prime coat to provide total DFT of 1.0 mil to 1.15 mils.
2. Colors: Colors as selected by Architect. Refer to Initial Color Selections in Submittals Article above.
3. For Concealed Metal Surfaces: Kynar 500, minimum 0.25 mil DFT.

**E.** Roof Panel Accessories: Provide components required for a complete metal roof panel assembly including trim, copings, fasciae, corner units, ridge closures, clips, flashings, sealants, gaskets, fillers, closure strips, and similar items. Match material and finish of metal roof panels, unless otherwise indicated.

1. Closures: Provide closures at eaves and ridges, fabricated of same metal as metal roof panels.
2. Clips: Minimum 0.0625-inch- thick, stainless-steel panel clips designed to

withstand negative-load requirements.

3. Cleats: Mechanically seamed cleats formed from minimum 0.0250-inch- thick, stainless-steel or nylon-coated aluminum sheet.
4. Backing Plates: Provide metal backing plates at panel end splices, fabricated from material recommended by manufacturer.
5. Closure Strips: Closed-cell, expanded, cellular, rubber or crosslinked, polyolefin-foam or closed-cell laminated polyethylene; minimum 1-inch- thick, flexible closure strips; cut or premolded to match metal roof panel profile. Provide closure strips where indicated or necessary to ensure weathertight construction.
6. Panel Sealants:
   a. Sealant Tape: Pressure-sensitive, 100 percent solids, gray polyisobutylene compound sealant tape with release-paper backing. Provide permanently elastic, nonsag, nontoxic, nonstaining tape 1/2 inch wide and 1/8 inch thick.
   b. Joint Sealant: ASTM C 920; elastomeric polyurethane, polysulfide, or silicone sealant; of type, grade, class, and use classifications required to seal joints in metal roof panels and remain weathertight; and as recommended in writing by metal roof panel manufacturer.
   c. Butyl-Rubber-Based, Solvent-Release Sealant: ASTM C 1311.

## 2.04 FLASHING AND COUNTERFLASHING SYSTEM

**A.** General: Formed from 0.0179-inch- thick, galvalume-coated sheet steel prepainted with coil coating. Provide flashing and trim as required to seal against weather and to provide finished appearance. Locations include, but are not limited to, eaves, rakes, corners, bases, framed openings, ridges, fasciae, and fillers. Flashings and counterflashings finish same as adjacent metal roof panels with color as selected by Architect.

## 2.05 FASCIAE AND TRIM SYSTEM

**A.** General: Formed from 0.0179-inch- thick, galvalume-coated sheet steel prepainted with coil coating. Provide components to sizes, profiles, and locations shown on the Drawings and as required to close and seal Roof Panel edges and other portions of this Work against weather and to provide finished appearance. Fasciae and Trim finish to be same as adjacent roof panels with colors as selected by Architect.

## 2.06 RAIN DRAINAGE SYSTEM

**A.** Gutters: Formed from 0.0179-inch- thick, galvalume-coated sheet steel prepainted with coil coating. Match profile of gable trim, complete with end pieces, outlet tubes, and other special pieces as required. Fabricate in minimum 96-inch- long sections, sized according to SMACNA's "Architectural Sheet Metal Manual." Furnish gutter supports spaced 36 inches o.c., fabricated from same metal as gutters. Provide bronze, copper, or aluminum wire ball strainers at outlets. Finish gutters to match metal roof panels, color as selected by Architect.

**B.** Downspouts: Formed from 0.0179-inch- thick, galvalume-coated sheet steel prepainted with coil coating; in 10-foot- long sections, complete with formed elbows and offsets. Finish downspouts to match metal roof panels, color as selected by Architect.

## 2.07 METAL SOFFIT SYSTEM

**A.** General: Provide factory-formed metal soffit panels designed to be field assembled by lapping and interconnecting side edges of adjacent panels and mechanically attaching through panel to supports using concealed fasteners and factory-applied sealant in side laps. Include accessories required for weathertight installation.

**B.** Metal Soffit Panels: “ABC”, Flush Panel System.

**C.** Description: Solid panels formed with vertical panel edges and flat pan between panel edges; with flush joint between panels and two vee grooves between joints, equally spaced.

1. Material: Galvalume coated sheet steel, type AZ 50, Grade 50 as described in ASTM 792, 22 gauge.
2. Panel Coverage (width): 12 inches.
3. Panel Height: 1.0 inch.
4. Sealant: Factory applied within interlocking joint.
5. Finish: Match finish of metal roof panels. Color: White, except otherwise selected by Architect.

## 2.08 FASTENERS

**A.** General: Provide stainless steel self-tapping screws, bolts, nuts, self-locking rivets and bolts, end-welded studs, and other suitable fasteners designed to withstand design loads. Provide exposed fasteners with heads matching color of metal roof panels by means of plastic caps or factory-applied coating.

1. Fasteners for Roof Panels: Self-drilling or self-tapping 410 stainless steel hex washer head, with EPDM or PVC washer under heads of fasteners bearing on

weather side of metal roof panels.

2. Fasteners for Flashing and Trim: Blind fasteners or self-drilling screws with hex washer head.
3. Blind Fasteners: High-strength stainless-steel rivets.

## 2.09 MISCELLANEOUS METAL FRAMING

**A.** General: Provide framing and support members shown on the Drawings to support components of Fasciae System, Roof Drainage System, Soffit System, and other portions of the Work of this Section which are not part of the Standing Seam Roof Panel System (including Flashing/Counterflashing Systems). Where framing and support members are not shown for such Work, provide metal studs, rigid furring channels (hat-shaped, z-shaped, c-shaped), straps, hanger and tie wire, and other necessary items, in general compliance with ASTM C645, to suit the Project conditions indicated.

**B.** Fasteners for Metal Framing: Of type, material, size, corrosion resistance, holding power, and other properties required to fasten steel members to substrates.

## 2.10 MISCELLANEOUS MATERIALS

**A**. Bituminous Coating: Cold-applied asphalt mastic, SSPC-Paint 12, compounded for 15- mil dry film thickness per coat. Provide inert-type noncorrosive compound free of asbestos fibers, sulfur components, and other deleterious impurities.

## 2.11 METAL ROOF SYSTEM ACCESSORIES

**A.** Pipe Flashing: Premolded, EPDM pipe collar with flexible aluminum ring bonded to base.

**B.** Thermal Insulation: Unfaced, Polyisocyanurate Board Insulation: ASTM C 591, Type II, compressive strength of 35 psi, with maximum flame-spread and smoke-developed indexes of 75 and 450, respectively, based on tests performed.

**C.** Retainer Strips: 0.019-inch- thick, formed, galvanized steel or PVC retainer clips colored to match insulation facing.

## 2.12 FABRICATION

**A.** General: Fabricate and finish metal roof system components and accessories at the factory to greatest extent possible, by manufacturer's standard procedures and

processes, as necessary to fulfill indicated performance requirements demonstrated by laboratory testing. Comply with indicated profiles and with dimensional and structural requirements.

**B.** Provide panel profile, including major ribs and intermediate stiffening ribs, if any, for full length of panel.

**C.** Where indicated, fabricate metal roof panel joints with factory-installed captive gaskets or separator strips that provide a tight seal and prevent metal-to-metal contact, in a manner that will minimize noise from movements within panel assembly.

**D.** Sheet Metal Accessories: Fabricate flashing and trim to comply with recommendations in SMACNA's "Architectural Sheet Metal Manual" that apply to the design, dimensions, metal, and other characteristics of item indicated.

1. Form exposed sheet metal accessories that are without excessive oil canning, buckling, and tool marks and that are true to line and levels indicated, with exposed edges folded back to form hems.
2. Fabricate nonmoving seams in accessories with flat-lock seams. Tin edges to be seamed, form seams, and solder.
3. Sealed Joints: Form nonexpansion but movable joints in metal to accommodate elastomeric sealant to comply with SMACNA standards.
4. Conceal fasteners and expansion provisions where possible. Exposed fasteners are not allowed on faces of accessories exposed to view.
5. Fabricate cleats and attachment devices from same material as accessory being anchored or from compatible, noncorrosive metal recommended by metal roof panel manufacturer.
   a. Size: As recommended by SMACNA's "Architectural Sheet Metal Manual" or metal roof panel manufacturer for application but not less than thickness of metal being secured.

## 2.13 FINISHES, GENERAL

**A.** Comply with NAAMM's "Metal Finishes Manual for Architectural and Metal Products" for recommendations for applying and designating finishes except as otherwise indicated.

**B.** Protect mechanical and painted finishes on exposed surfaces from damage by applying a strippable, temporary protective covering before shipping.

**C.** Appearance of Finished Work: Variations in appearance of abutting or adjacent pieces are acceptable if they are within one-half of the range of approved Samples. Noticeable variations in the same piece are not acceptable. Variations in appearance

of other components are acceptable if they are within the range of approved Samples and are assembled or installed to minimize contrast.

## PART 3 - EXECUTION

### 3.01 EXAMINATION

**A.** Examine substrates, areas, and conditions, with Installer present, for compliance with requirements for installation tolerances, metal roof panel supports, and other conditions affecting performance of work.

1. Examine primary and secondary roof framing to verify that rafters, purlins, angles, channels, and other structural panel support members and anchorages have been installed within alignment tolerances required by metal roof panel manufacturer.
2. Examine solid roof sheathing to verify that sheathing joints are supported by framing or blocking and that installation is within flatness tolerances required by metal roof panel manufacturer.
3. For the record, prepare written report, endorsed by Installer, listing conditions detrimental to performance of work.

**B.** Examine roughing-in for components and systems penetrating metal roof panels to verify actual locations of penetrations relative to seam locations of metal roof panels before metal roof panel installation.

**C.** Proceed with installation only after unsatisfactory conditions have been corrected.

### 3.02 PREPARATION

**A.** Clean substrates of substances harmful to insulation, including removing projections capable of interfering with insulation attachment.

**B.** Board Insulation: Extend insulation in thickness indicated to cover entire roof. Comply Insulation Manufacturer’s requirements to suit Project conditions.

**C.** Install flashings and other sheet metal to comply with requirements specified in Division 7 Section "Sheet Metal Flashing and Trim."

**D.** Install fasciae, trim, copings, and other Roof System components to comply with requirements specified in Division 7 Section "Sheet Metal Flashing and Trim."

**E.** Miscellaneous Framing: Install subpurlins, eave angles, furring, and other miscellaneous roof panel support members and anchorage according to metal roof panel manufacturer's written recommendations.

1. Soffit Framing: Wire-tie or clip furring channels to supports, as required to

comply with requirements for assemblies indicated.

## 3.03 METAL ROOF SYSTEM INSTALLATION

**A.** General: Comply with Metal Roof System Manufacturer's written instructions and recommendations for installation, as applicable to project conditions and underlying substrates.

1. Anchor metal roof panels and other components of the Work securely in place, with concealed fasteners to the greatest extent possible (and when not possible, use stainless steel fasteners, colored to match items being fastened).
2. Make provisions for thermal and structural movement of system and subsystems (such as Roof Drainage)

**B.** Metal Protection: Where dissimilar metals will contact each other or corrosive substrates, protect against galvanic action by painting contact surfaces with bituminous coating, by applying rubberized-asphalt underlayment to each contact surface, or by other permanent separation as recommended by metal roof panel manufacturer.

**C.** Joint Sealers: Install gaskets, joint fillers, and sealants where indicated and where required for weatherproof performance of metal roof panel assemblies. Provide types of gaskets, fillers, and sealants indicated or, if not indicated, types recommended by metal roof panel manufacturer.

1. Seal metal roof panel end laps with double beads of tape or sealant, full width of panel. Seal side joints where recommended by metal roof panel manufacturer.
2. Prepare joints and apply sealants to comply with requirements in Division 7 Section "Joint Sealants."

## 3.04 STANDING SEAM ROOF PANEL INSTALLATION

**A.** Provide metal roof panels of full length from eave to ridge, unless otherwise indicated or restricted by shipping limitations.

1. Field cutting of metal roof panels by torch is not permitted.

**B.** Fasten metal roof panels to supports with concealed clips at each standing-seam joint at location, spacing, and with fasteners recommended by manufacturer. Use stainless-steel fasteners for surfaces exposed to the exterior and galvanized steel fasteners for surfaces exposed to the interior.

1. Install clips to supports with self-tapping fasteners.
2. Install pressure plates at locations indicated in manufacturer's written installation instructions.

**C.** Seamed Joint: Crimp standing seams with manufacturer-approved motorized seamer tool so clip, metal roof panel, and factory-applied sealant are completely engaged.

**D.** Pipe Flashing: Form flashing around pipe penetration and metal roof panels. Fasten and seal to metal roof panels as recommended by manufacturer.

## 3.05 RAIN DRAINAGE SYSTEM INSTALLATION

**A.** Gutters: Joint sections with riveted and soldered or lapped and sealed joints. Attach gutters to eave with gutter hangers spaced not more than 4 feet o.c. using manufacturer's standard fasteners. Provide end closures and seal watertight with sealant. Provide for thermal expansion.

**B.** Downspouts: Join sections with 1-1/2-inch telescoping joints. Provide fasteners designed to hold downspouts securely 1 inch away from walls; locate fasteners at top and bottom and at approximately 60 inches o.c. in between.

1. Provide elbows at base of downspouts to direct water away from building.
2. Tie downspouts to underground drainage system indicated.

## 3.06 METAL SOFFIT PANELS

**A.** Provide metal soffit panels full width of soffits. Install panels perpendicular to support framing.

1. Flash and seal panels with weather closures where metal soffit panels meet walls and at perimeter of all openings.

**B.** Fascia Panels: Align bottom of panels and fasten with blind rivets, bolts, or self-tapping screws. Flash and seal panels with weather closures where fasciae meet soffits, along lower panel edges, and at perimeter of all openings.

## 3.07 ACCESSORY INSTALLATION

**A.** General: Install accessories with positive anchorage to building and weathertight mounting and provide for thermal expansion. Coordinate installation with flashings and other components.

1. Install components required for a complete metal roof panel assembly including trim, copings, ridge closures, seam covers, flashings, sealants, gaskets, fillers, closure strips, and similar items.

**B.** Flashing and Trim: Comply with performance requirements, manufacturer's written installation instructions, and SMACNA's "Architectural Sheet Metal Manual." Provide concealed fasteners where possible, and set units true to line and level as indicated. Install work with laps, joints, and seams that will be permanently watertight and weather resistant.

1. Install exposed flashing and trim that is without excessive oil canning, buckling, and tool marks and that is true to line and levels indicated, with exposed edges folded back to form hems. Install sheet metal flashing and trim to fit substrates and to result in waterproof and weather-resistant performance.
2. Expansion Provisions: Provide for thermal expansion of exposed flashing and trim. Space movement joints at a maximum of 10 feet with no joints allowed within 24 inches of corner or intersection. Where lapped or bayonet-type expansion provisions cannot be used or would not be sufficiently weather resistant and waterproof, form expansion joints of intermeshing hooked flanges, not less than 1 inch deep, filled with mastic sealant (concealed within joints).

## 3.08 ERECTION TOLERANCES

**A.** Installation Tolerances: Shim and align metal roof panel units within installed tolerance of 1/4 inch in 20 feet on slope and location lines as indicated and within 1/8-inch offset of adjoining faces and of alignment of matching profiles.

## 3.09 FIELD QUALITY CONTROL

**A.** Testing Agency: Engage a qualified independent testing and inspecting agency to perform inspections and prepare reports.

**B.** Manufacturer's Field Service: Engage a factory-authorized service representative to inspect completed metal roof panel installation, including accessories. Report results in writing.

**C.** Remove and replace applications of metal roof panels where inspections indicate that they do not comply with specified requirements.

**D.** Additional inspections, at Contractor's expense, will be performed to determine compliance of replaced or additional work with specified requirements.

## 3.10 CLEANING AND PROTECTION

**A.** Remove temporary protective coverings and strippable films, if any, as metal roof panels are installed, unless otherwise indicated in manufacturer's written installation instructions. On completion of metal roof panel installation, clean finished surfaces as recommended by metal roof panel manufacturer. Maintain in a clean condition during construction.

**B.** Replace metal roof panels that have been damaged or have deteriorated beyond successful repair by finish touchup or similar minor repair procedures.

**END OF SECTION 074113**

# SECTION 07920

# JOINT SEALANTS

MasterSeal® NP 2™ Sealant (Formerly Sonolastic NP 2)

## PART 1 - GENERAL

### 1.01 SCOPE OF WORK

Section Includes: Application of elastomeric joint sealants at all expansion joints and architectural caulking at Pavilion areas steel and louvers.

Related Sections:
Section 03300 – Cast-in-Place Concrete.
Section 08910 – Fixed Metal Louvers
Section 09960 – Fluid Applied Traffic Rated Deck Coatings
Section 09970 – Steel Coatings

### 1.02 SUBMITTALS

Comply with Section [01 33 00]

Product Data: Submit manufacturer's technical data sheets. All products must show evidence of compatibility with proposed traffic rated deck coatings.

**Samples:**

- Initial Selection Purposes: For each product exposed to view, manufacturer's standard bead consisting of strips of actual products showing full range of colors available.
- Verification: Two sets of each type and color of joint sealant required. Install joint sealant samples in 1/2-inch wide joints formed between two 6-inch long strips of material matching appearance of exposed surfaces adjacent to joint sealants.
- Submit laboratory tests or data validating product compliance with performance criteria specified.
- Submit list of references from 3 projects similar in scope to this project. Include contact name and phone number of the person charged with oversight of each project.
- Warranty: Provide manufacturer's standard material warranty.

### 1.03 QUALITY ASSURANCE

Comply with Section [01 40 00]

**Qualifications:**

- Manufacturer Qualifications: Company regularly engaged in manufacturing and marketing of products specified in this section.
- Applicator Qualifications: Qualified to perform work specified by reason of experience or training provided by product manufacturer.

**Mock-Ups:**

- When construction progress allows, perform mock-up of required sealant work on concrete mock-up sample panel required by Specification Section 03300 – Cast-in Place Concrete. Perform minimum of one mock-up for each different combination of substrates to be sealed. Coordinate mock-up areas with architect/engineer.
- Install mock-ups and test in presence of sealant manufacturer's authorized representative and architect/engineer to ensure application procedures are consistent with warranty requirements.
- After sealant has achieved sufficient cure as coordinated with manufacturer's representative, conduct adhesion pull-tests or non-destructive testing, at discretion of architect/engineer. Conduct tests in accordance with ASTM C1521.
- Confirm results of adhesion tests as acceptable to architect/engineer and sealant manufacturer before starting work.
- Leave approved mock-ups in place to establish standards and guidelines for acceptable application of sealant work and acceptable appearance.

## 1.04 DELIVERY, STORAGE, AND HANDLING

Deliver products in original factory packaging bearing identification of product, manufacturer, and batch number.

Store products in original, unopened containers in clean, dry area away from heat and direct sunlight.

## 1.05 PROJECT CONDITIONS

Do not use products under conditions of precipitation or in inclement or freezing weather. Verify that substrates are clean, dry and frost-free. Use appropriate measures for protection and supplementary heating to ensure proper curing conditions in accordance with manufacturer's recommendations if application during inclement weather occurs.

# PART 2 - PRODUCTS

## 2.01 MATERIALS

Subject to compliance with requirements, provide products from the following manufacturer (or approved equal):

- BASF Corporation

- Construction Chemicals
- Customer Service: 800- 433-9517
- Technical Service: 800-243-6739
- Website: www.master-builders-solutions.basf.us

Substitutions: Other proposed manufacturers shall comply with minimum levels of material, color selection, and detailing indicated in specifications or on drawings. Architect/engineer will be sole judge of appropriateness of substitutions.

A. MATERIALS

- multi-component, highly flexible, non-priming, high performance polyurethane sealant.
- Acceptable Product: MasterSeal NP 2 (formerly Sonolastic NP 2) by BASF (or approved equal).

**Performance Requirements:** Provide sealant complying with the following requirements:

Compliances:

a. ASTM C920, Type M, Grade NS, Class 25, Use NT, T, A, M, I and O.
b. Federal Specification TT-S-00227E, Type II, Class A.
c. Corps of Engineers CRD-C-506.
d. CFI accepted
e. Service Temperature Range: Minus 40 to 180 degrees F (minus 40 to 82 degrees C).
f. Shrinkage: None.
g. Tensile Strength, ASTM D412: 160 psi (1.1 MPa).
h. Ultimate Elongation at Break, ASTM D412: 280 percent.
i. Rheological (Flow), ASTM C639, 120 degrees F (49 degrees C): Nonsag.
j. Extrusion Rate, ASTM C603, 3 hours after mixing: 6 seconds, passes.
k. Hardness, ASTM C661, Shore A:
l. Standard Conditions: 25.
m. After Heat Aging: 22.
n. Weight Loss, ASTM C792, after heat aging: 4.7 percent.
o. Cracking and Chalking, ASTM C792, after heat aging: None.
p. Tack-Free Time, ASTM C679: Less than 48 hours.
q. Stain and Color Change, ASTM C510: Passes, no visible stain.
r. Bond Durability, ASTM C719, on glass, aluminum, and concrete: Plus or minus 25 percent.
s. Adhesion in Peel, ASTM C794, on glass, aluminum, and concrete: Greater than 10 pli.
t. Adhesion in Peel, after UV radiation through glass, ASTM C794: Greater than 10 pli.
u. Artificial Weathering, ASTM C793, Xenon arc, 250 hours: Passes.

v. Artificial Weathering, ASTM G26, Xenon arc, 2,000 hours: No surface cracking.
w. Water Immersion, ASTM C1247, 122 degrees F (50 degrees C): Passes 10 weeks with movement cycle.
x. VOC Content: When mixed, product contains less than 25 g/L, less water and exempt solvents.

Design Requirements:

Design number of joints and joint widths for maximum of plus or minus 25 percent movement.

Design depth of sealant to be 1/2 width of joint.

a. Maximum Depth: 1/2 inch (13 mm).
b. Minimum Depth: 1/4 inch (6 mm).
c. Maximum Recommended Width: 2 inches (51 mm).

B. Colors

Sealant Colors: Selected by architect/engineer from manufacturer's full color range.

## PART 3 - EXECUTION

A. EXAMINATION

1. Inspect areas involved in work to establish extent of work, access and need for protection of surrounding construction.
2. Examine joints for defects that would adversely affect quality of installation.
3. Provide additional joint preparation, beyond that outlined in specifications, as required by sealant manufacturer and architect/engineer's recommendations based on mock-ups and field adhesion tests.

B. SURFACE PREPARATION

1. Prepare surfaces in accordance with manufacturer's instructions.
2. Clean joints as required to expose sound surface free of contamination and laitance.
3. Ensure structurally sound surfaces, dry, clean, free of dirt, moisture, loose materials, oil, grease, asphalt, tar, paint, wax, rust, waterproofing, curing and parting compounds, membrane materials, and other foreign matter that impair adhesion of sealant.
4. Concrete, Stone, and Other Masonry:
   a. Clean by grinding, sandblasting, or wire brushing to expose sound surface free of contamination and laitance.

5. Wood:
   a. Clean new and weathered wood. Scrape away loose paint to bare wood. If coatings cannot be removed, test coatings to verify adhesion of sealant or determine appropriate primer.

6. Metal:
   a. Remove scale, rust, and coatings from metal to expose bright white surface. Remove protective coatings and chemical residue or film.
   b. Aluminum Frames: Remove clear lacquer before application of joint sealants. If coating cannot be removed, test coatings to verify adhesion of sealant or determine appropriate primer.
   c. Remove other protective coatings or finishes that could interfere with adhesion.

C. PRIMING

Where circumstances or substrates require primer, comply with the following requirements:

a. Apply primer in accordance with manufacturer's instructions.
b. Allow primer to dry before applying joint sealants.
c. Prime and seal on same workday.

D. MIXING

a. Mix components in accordance with manufacturer's instructions.

E. APPLICATION

Back-Up Material:

a. Install appropriate size backer rod, larger than joint where necessary in accordance with manufacturer's recommendations, and in manner to provide concave sealant profile.
b. Where joint depth does not permit installation of backer rod, install adhesive-backed polyethylene bond-breaker tape along entire back of joint to prevent 3-sided adhesion of joint sealant.

Sealant:

a. Apply sealant in accordance with manufacturer's instructions.
b. Verify that temperature and moisture conditions are within manufacturer's acceptable limits.
c. Completely fill joint with sealant, filling from bottom up to avoid entrapping air.
d. Using clean, dry tool with rounded edge, and of appropriate width for each joint, tool freshly installed sealant to provide preferred concave profile, to ensure intimate contact between sealant and substrate, and to provide neat appearance. Where surface aggregate does not permit proper tooling, install sealant and backer rod so that face of joint is recessed behind exposed aggregate, and sealant is bonded to firm, even surface.

e. Use dry tooling method. Do not use tooling agents such as soapy water or solvents that have not been approved by sealant manufacturer.

F. CURING

Allow sealant to cure in accordance with manufacturer's instructions.

G. INSPECTION

During work of the section, inspect work to assure compliance with manufacturer's instructions, specifications and drawings.

a. Evaluate adhesion of sealant in accordance with ASTM C1521.
b. Allow inspections of work and assist in testing requested by manufacturer's representative and architect/engineer.

Non-Compliant Work: If inspections reveal non-compliant work or work that was not installed in accordance with specifications, and/or manufacturer requirements, remove adjacent work until a location is reached where installation was performed properly. Assist in spot-checking of remainder of work.

H. CLEANING

Remove excess sealant in accordance with manufacturer's instructions.

I. PROTECTION

Protect sealant from damage during construction.

**END OF SECTION**

# SECTION 08310
# MANWAY ACCESS DOORS & FRAMES

## PART 1 - GENERAL

The heavy-duty angle type floor access door is designed for interior and exterior applications where water tightness is not required. It is designed for off-street locations that may occasionally receive AASHTO H20-44 wheel loads.

### 1.1 SPECIFICATIONS:

A. The floor access door shall be Model AHS as manufactured by U.S.F. Fabrication (or approved equal), Inc. with the size being 30”x36” as specified on the plans (frame size is 40”x42”). Door leaf shall be 1/4-inch thick aluminum diamond plate reinforced for an AASHTO H20-44 wheel load. Manufacturer shall provide structural calculations showing that the door design meets the loading requirements of AASHTO H20-44. (The access door is designed for off-street locations that may occasionally receive AASHTO H20-44 wheel loads.) The frame shall be extruded aluminum with an integral anchor flange and door seat on all four sides. The floor access door shall be equipped with a flush lifting handle that does not protrude above the cover, and a 316 stainless steel hold open arm with red vinyl grip that automatically keeps the cover in its upright, open position. The door shall have 316 stainless steel hinges and 316 stainless steel tamper resistant bolts/locknuts. The door shall be equipped with a watertight 316 stainless steel slamlock with threaded plug, removable outside key, and fixed inside handle. The slamlock latches onto a 316 stainless steel striker plate that is bolted to the frame. An adhesive backed vinyl material that protects the product during shipping and installation shall cover the entire top of the frame and cover. Installation shall be in accordance with the manufacturer’s attached instructions. The entire frame including the seat on which the reinforcing rests shall be supported by concrete or other material designed to support the specified load. The door shall be manufactured and assembled in the United States. Manufacturer shall guarantee the door against defects in materials and workmanship for a period of ten years.

### 1.2 OPTIONAL FEATURES TO BE INCLUDED

1. Stainless steel horizontal springs or gas shocks for easy opening
2. Recessed staple and other locking devices
3. Frame skirts for easy casting into a concrete top slab

**END SECTION 08310**

# SECTION 08910
# METAL WALL LOUVERS

## PART 1 - GENERAL

### 1.1 RELATED DOCUMENTS

A. Applicable portions of the Agreement, Conditions of the Contract (General, Supplementary, and other Conditions), Drawings, Specifications, Addenda issued prior to the execution of the Contract, other documents listed in the Agreement and Modifications issued after the execution of the Contract shall apply to the work in this Section. The general requirements for this work are located in Division 1 of the Specifications.

### 1.2 GENERAL

A. Provide metal wall louvers and accessories as specified herein and as indicated on the drawings. Refer drawings for sizes and locations used. Louvers must meet the air and water performance characteristics specified. Structurally, all louvers and their accessories to withstand impact, wind, and snow loads as required by the ICC IBC. The maximum allowable deflection for louver structural members to be 1/180 of span or .75" (whichever is less). The maximum allowable deflection for the louver blades to be 1/120 of span or .50" across the weak axis (whichever is less).

### 1.3 APPLICABLE STANDARDS

A. The publications listed below form a part of this specification to the extent referenced. The publications are referred to in the text by the basic designation only.

1. THE ALUMINUM ASSOCIATION, INCORPORATED (AA)

   AA DAF-45 Designation System for Aluminum Finishes

2. AMERICAN ARCHITECTURAL MANUFACTURERS ASSOCIATION

   AAMA 2604 Voluntary Specification, Performance Requirements and Test Procedures for Superior Performing Organic Coatings on Aluminum Extrusions and Panels.

AAMA 2605 Voluntary Specification, Performance Requirements and Test Procedures for Superior Performing Organic Coatings on Aluminum Extrusions and Panels

3. AIR MOVEMENT AND CONTROL ASSOCIATION, INC (AMCA)

AMCA 500 Louvers, Dampers and Shutters

AMCA 511 Certified Ratings Program for Air Control Devices

4. AMERICAN SOCIETY FOR TESTING AND MATERIALS (ASTM)

ASTM B209 Aluminum and Aluminum-Alloy Sheet and Plate

ASTM B221 Aluminum and Aluminum-Alloy Extruded Bars, Rods, Wire, Profiles, and Tubes

ASTM E1886 Standard Test Method for Performance of Exterior Windows, Curtain Walls, Doors, and Impact Protective Systems Impacted by Missile(s) and exposed to Cyclic Pressure Differentials.

ASTM E1996 Standard Specification for Performance o f Exterior Windows, Curtain Walls, Doors and Impact Protective Systems Impacted by Windborne Debris in Hurricanes

5. INTERNATIONAL CODE COUNCIL, INC.(ICC)

ICC IBC International Building Code

## 1.4 SUBMITTALS

A. Product Data: Submit product data sheets on each type of louver indicating standard features and physical characteristics of louver, including, but not limited to, design data, profile, materials descriptions and thicknesses, structural design, finish, air flow performance, and wind driven rain performance.

B. Wall Louver Colors: Colors of finishes shall match colors scheduled or indicated. Where color is not indicated, submit the manufacturer's standard color chips to the Architect for color selection.

C. Shop Drawings: Show all information necessary for fabrication and installation

of louvers. Indicate materials, sizes, thickness, fastenings, and profiles. Include elevations, sections, and specific details for each louver. Show anchorage details and connections for all component parts. Shop drawings to be signed and sealed by a registered professional engineer licensed to practice in Mississippi.

D. Submit AMCA test data as required to confirm that the louvers have the specified air and water performance characteristics.

E. Where applicable, submit test reports to confirm that the louvers meet the specified STC and Noise Reduction requirements.

F. Structural Calculations: Submit structural calculations performed, sign, and sealed by a registered professional engineer licensed to practice in Mississippi proving that the wall louvers and their accessories meet all the design requirements specified.

## 1.5 DELIVERY, STORAGE, AND PROTECTION

A. Deliver materials to the site in an undamaged condition. Carefully store materials off the ground to provide proper ventilation, drainage, and protection against dampness. Louvers shall be free from nicks, scratches, and blemishes. Replace defective or damaged materials with new.

# PART 2 - PRODUCTS

## 2.1 MATERIALS

A. Aluminum Sheet: ASTM B209, alloy 3003 or 5005 with temper as required for forming.

B. Extruded Aluminum: ASTM B221, alloy 6063-T5 or –T52.

## 2.2 METAL WALL LOUVERS

A. Weather resistant type, with bird screens and made to withstand the positive and negative wind pressures and pass small and large missile tests (ASTM E1886 & ASTM E1996) as per the ICC IBC requirements. Wall louvers shall bear the AMCA certified ratings program seal for air performance and water penetration in accordance with AMCA 500 and AMCA 511. The rating shall show a water penetration of 0.20 or less ounce per square foot of free area at a free velocity of 800 feet per minute. Louvers shall be equivalent construction and performance to the following louver models as manufactured by Construction Specialties, Inc. Louvers to be of extruded aluminum

construction. Louvers will be provided with aluminum casings, sub-sills, fasteners, structural supports, mullions, mullion covers, bird screens, and other accessories as required for a complete installation.

1. Impact/Hurricane Louvers (Dade County Approved): C/S Models DC-5304, DC- 7044/A4080 or DC-7044/4097. Dade County Protocols (TAS-201, TAS-202 & TAS-203)
2. High Performance Drainable Fixed Louvers: C/S Models A4097, A4157, A6097 or 6157.
3. Mullions and Mullion Covers: Same material and finish louvers. Unless indicated otherwise, provide mullions for all louvers more than 5 feet in width at not more than 5 feet on centers. Provide mullions covers on both faces of joints between louvers.
4. Screens and Frames: For aluminum louvers, provide ½-inch square mesh, 14 or 16 gage aluminum or 5/8" flattened expanded mesh aluminum bird screening. Mount screens in removable, rewirable frames of same material and finish as the louvers. Screens shall be placed on the interior side of louver.
5. Casings (Surround Trim): Provide casings at perimeter jambs and head of metal louver. Casing material and finish shall match louver finish. Casings shall be design for removal of louvers in wall from the interior side. Aluminum casing shall be 0.080” minimum thickness.
6. Sub-Sills: Provide sub-sills at bottom of louvers, properly membered, and shaped and constructed to drain any water to the louver exterior. Sub-sills shall also form a cap flashing for wall construction below the louvers. Aluminum sub-sills shall be formed as indicated, continuous below louvers, and of 0.080” minimum thickness.
7. Provide blank covers over the unused portion of the louvers (on the interior side of the louvers) when mechanical ductwork or other mechanical items are connected to the louvers and are of a smaller size than the louver. The blank covers shall be of 0.080” minimum thickness aluminum. Coordinate the shape, size, and location of the blank covers with the mechanical work.

## 2.3 FASTENERS AND ACCESSORIES

A. Provide 316 stainless steel screws and fasteners for aluminum louvers. Provide

other accessories as required for complete and proper installation.

## 2.4 FINISHES

A. Aluminum Finish: After fabrication of louvers prepare the aluminum surfaces for finishing in accordance with the aluminum producer's recommendations and standards of the finisher of processor. Process all components of each assemble simultaneously to attain complete uniformity of color. All anodized finishes shall be listed in AA 45, unless indicated otherwise.

1. Architectural Class II Clear Anodic Coating (AA-M12C22A31).
2. Architectural Class I Clear Anodic Coating (AA-M12C22A41).

B. Aluminum Finish: Fluoropolymer Paint Coating conforming to requirements of AAMA 2605 or 2604 (Colors shall be as scheduled or, if not scheduled, as selected by the Architect).

1. High-Performance Organic Finish (3-Coat Fluoropolymer, Factory Spray Applied): AA-C12C40R1x (Chemical Finish: cleaned with inhibited chemicals; Chemical Finish: conversion coating; Organic Coating: manufacturer's standard 3-coat, thermocured system consisting of specially formulated inhibitive primer, fluoropolymer color coat, and clear fluoropolymer topcoat, with both color coat and clear topcoat containing not less than 70 percent polyvinylidene fluoride resin by weight). Prepare, pretreat, and apply coating to exposed metal surfaces to comply with AAMA 2605 and with coating and resin manufacturers' written instructions. Fluoropolymer coating manufacturer shall provide a 10 or 12 years warranty against any blistering, peeling, cracking, chalking (no less than No. 8), and color change {no more than 5□E (Hunter) Units}. Premium color and gloss to be as selected by the Architect.

# PART 3 - EXECUTION

## 3.1 INSTALLATION

A. Wall Louvers: Install using casings, sub-sills, blank covers, and jamb fasteners as appropriate for the wall construction and in accordance with manufacturer's recommendations.

B. Screens and Frames: Attach frames to interior size of wall louvers with screws or

bolts.

C. All louvers shall be caulked to adjacent surfaces. Color will be determined by Architect or Engineer.

## 3.2 PROTECTION FROM CONTACT OF DISSIMILAR MATERIALS

A. Aluminum: Where aluminum contacts metal other than zinc, paint the dissimilar metal with a primer and two coats of aluminum paint.

B. Metal: Paint metal in contact with mortar, concrete, or other masonry materials with alkali-resistant coatings such as heavy-bodied bituminous paint.

**END OF SECTION**

# SECTION 09900
# High Build Wall Coatings

MasterProtect® HB 400 Waterproof Coating (Formerly Thorocoat)

## PART 1 - GENERAL

### 1.1 SUMMARY

A. Section Includes:
   1. Application of water-based, high-build, 100 percent acrylic, waterproof coating to all vertical concrete walls and columns.

B. Related Sections:
   1. Section 03300 – Cast-in-Place Concrete
   2. Section 07920 – Joint Sealants

### 1.2 SUBMITTALS

A. Comply with Section [01 33 00]

B. Product Data: Submit manufacturer's technical data sheets. All products must show evidence of compatibility with Joint Sealants specified under Section 07920.

C. Submit list of project references as documented in this specification under Quality Assurance Article. Include contact name and phone number of the person charged with oversight of each project.

### 1.3 QUALITY ASSURANCE

A. Comply with Section [01 40 00]

B. Qualifications:
   1. Manufacturer Qualifications: Company with minimum 15 years of experience in manufacturing of specified products.
   2. Manufacturer Qualifications: Company shall be ISO 9001:2000 Certified.
   3. Applicator Qualifications: Company with minimum of 5 years' experience in application of specified products on projects of similar size and scope and is acceptable to product manufacturer.
      a. Successful completion of a minimum of 3 projects of similar size and complexity to specified work.

C. Field Sample:
   1. Install at project site or another pre-selected area of the project, minimum 4 feet by 7 feet using specified material.
   2. Apply material in accordance with manufacturer's written application instructions.
   3. Manufacturer's representative or designated representative will review technical aspects; surface preparation, repair and workmanship.

4. Field sample will be standard for judging workmanship on remainder of project.
5. Maintain field sample during construction for workmanship comparison.
6. Do not alter, move, or destroy field sample until work is completed and approved by architect/engineer.
7. Obtain architect/engineer written approval of field sample before start of material application, including approval of aesthetics, color, texture and appearance.
8. Perform adhesion test in accordance with ASTM D3359, Method A. Minimum adhesion rating of 4A required on 0 to 5 scale.

## 1.4 DELIVERY, STORAGE, AND HANDLING

A. Comply with manufacturer's ordering instructions and lead-time requirements to avoid construction delays.

B. Deliver materials in manufacturer's original, unopened, undamaged containers with identification labels intact.

C. Store tightly sealed materials off ground and away from moisture, direct sunlight, extreme heat and freezing temperatures.

## 1.5 PROJECT CONDITIONS

A. Environmental Requirements:
1. Do not apply material when substrate or ambient temperature is 40 degrees F (4 degrees C) or below or is expected to fall below 40 degrees F (4 degrees C) within 24 hours after application.
2. Do not apply material if rain is expected within 24 hours of application.
3. Do not apply over moving cracks, control joints, or expansion joints.
4. Do not apply to horizontal traffic-bearing surfaces.

# PART 2 - PRODUCTS

## 2.1 MANUFACTURERS

A. Subject to compliance with requirements, provide products from the following manufacturer:

BASF Corporation
Construction Chemicals
Customer Service: 800- 433-9517
Technical Service: 800-243-6739
Website: www.master-builders-solutions.basf.us

B. Substitutions: Other manufacturers shall comply with minimum levels of material, color selection, and detailing indicated in specifications or on drawings. Architect/engineer will be sole judge of appropriateness of substitutions.

## 2.2 MATERIALS

A. Water-based, high-build, 100 percent acrylic, waterproof coating.
   1. Acceptable Product: MasterProtect HB 400 (Formerly Thorocoat) by BASF.

B. MasterProtect HB 400 Smooth:
   1. Density, ASTM D1475: 11.4 to 12.4 lbs per gal (1.37 to 1.49 kg/L).
   2. Solids Content, ASTM D5201:
      a. By Weight: 53.4 – 56.4 percent.
      b. By Volume: 37.0 – 39.0 percent.
   3. Viscosity, ASTM D562: 105 to 120 KU.
   4. VOC Content, ASTM D3960: 0.83 lbs per gal (100 g/L), less water and exempt solvents.

C. MasterProtect HB 400 Fine:
   1. Density, ASTM D1475: 13.1 to 14.1 lbs per gal (1.57 to 1.69 kg/L).
   2. Solids Content, ASTM D5201:
      a. By Weight: 66.6 – 71.2 percent.
      b. By Volume: 48.0 – 50.0 percent.
   3. Viscosity, ASTM D562: 117 to 125 KU.
   4. VOC Content, ASTM D3960: 0.60 lbs per gal (72 g/L), less water and exempt solvents.

D. MasterProtect HB 400 Coarse:
   1. Density, ASTM D1475: 13.2 to 14.2 lbs per gal (1.58 to 1.70 kg/L).
   2. Solids Content, ASTM D5201:
      a. By Weight: 67.0 – 71.6 percent.
      b. By Volume: 50 percent.
   3. Viscosity, ASTM D562: 117 to 125 KU.
   4. VOC Content, ASTM D3960: 0.59 lbs per gal (70 g/L), less water and exempt solvents.

E. Performance Requirements: MasterProtect HB 400 Smooth:
   1. Resistance to Wind-Driven Rain, Federal Specification ASTM D 6904: Meets requirement. No water penetration.
   2. Accelerated Weathering, ASTM G152, 5,000 hours: Passes.
   3. Visual Color Change, ASTM D1729, 5,000 hours: Passes.
   4. Chalking, ASTM D4214, 5,000 hours: Passes.
   5. Freeze/Thaw Resistance, DOT Methods A and B, 50 cycles: Passes.
   6. Water-Vapor Permeance, ASTM D1653: 13 perms.
   7. Moisture Resistance, Federal Specification TT-C-555B: Meets requirement. No blistering, loss of adhesion, or discoloration.
   8. Salt Spray (Fog) Resistance, ASTM B117, 300 hours: Passes.
   9. Carbon-Dioxide Diffusion, PR EN 1062-6:
      a. R (equivalent air-layer thickness): 1,318 feet (402 m).
      b. Sc (equivalent concrete thickness): 39 inches (100 cm).

10. Flexibility, ASTM D1737, 1-inch mandrel: No cracking.
11. Dirt Pick-Up, ASTM D3719, after 6 months exposure: 92 percent. Passes.
12. Sand Abrasion Resistance, ASTM D968, Method A, at 3,000 L: Passes.
13. Impact Resistance, ASTM D2794, at 30 in-lbs: Passes.
14. Fungus Resistance, ASTM D3273: No growth. Meets requirement.
15. Mildew Resistance, Federal Specification TT-P-29 (Federal Standard 141, Method 6152 and 6271.1):
    a. Aspergillus Oryzae, 7 days: No growth.
    b. Aspergillus Niger, 21 days: No growth.
16. Surface Burning Characteristics, ASTM E84:
    a. Flame Spread: 1.
    b. Smoke: 4.
    c. Fuel Contribution: 7
17. Flash point, Greater than 200 degrees F (93 degrees C) ASTM D 56 Tag Closed Tester

F. Approximate Coverage Rate: 75 to 100 sq ft per gal (1.84 to 2.46 $m^2$/L).

G. Wet Film Thickness (WFT):
1. Smooth: 16 to 22 mils (406 to 559 microns).
2. Fine: 16 to 22 mils (406 to 559 microns).
3. Coarse: 16 to 22 mils (406 to 559 microns).

H. Dry Film Thickness (DFT):
1. Smooth: 6 to 8 mils (152 to 203 microns).
2. Fine: 8 to 11 mils (203 to 279 microns).
3. Coarse: 8 to 11 mils (203 to 279 microns).

I. Colors: TBD by Architect..

J. Texture: TBD by Architect – Condition of base concrete once formwork is removed will play a large factor in determining texture,
1. Smooth.
2. Fine.
3. Coarse.

## PART 3 - EXECUTION

### 3.1 EXAMINATION

### 3.2 SURFACE PREPARATION

A. Protection: Protect adjacent work areas and finish surfaces from damage during coating application.

B. Prepare surfaces in accordance with manufacturer's instructions.

C. Ensure that substrate is sound, clean, dry, and free of dust, dirt, oils, grease, laitance, efflorescence, mildew, fungus, biological residues, and other contaminants that could prevent proper adhesion.

D. Ensure concrete substrates have a minimum 28-day cure and are free of bond-inhibiting contaminants.

E. Clean surface to achieve texture similar to medium-grit sandpaper.

F. Repair holes and spalled and damaged concrete with repair materials approved by coating manufacturer.

G. Remove protruding concrete accessories and smooth out irregularities.

H. When chemical cleaners are used, neutralize compounds and fully rinse surface with clean water. Allow surface to dry before proceeding.

I. Remove blisters or delaminated areas and sand edges to smooth rough areas and provide transition to existing paint areas.

J. Check adhesion of existing paint in accordance with ASTM D3359, measuring adhesion by Tape Method A.

K. Treat cracks greater than 1/32 inch (0.8 mm) with knife-grade or brush-grade patching compound.

L. Treat cracks greater than 1/4 inch (6 mm) as expansion joints and fill with sealant approved by coating manufacturer.

M. Prepare and treat cracks in accordance with manufacturer's instructions.

## 3.3 PRIMING

A. Apply primer in accordance with manufacturer's instructions.

B. Use primer approved by coating manufacturer.

## 3.4 MIXING

A. Mix coating in accordance with manufacturer's instructions to ensure uniform color and aggregate disbursement and to minimize air entrapment.

B. In multi-pail applications, mix contents of each new pail into partially used pail to ensure color consistency and smooth transitions from pail to pail.

## 3.5 APPLICATION

A. Apply coating in accordance with manufacturer's instructions.

B. Apply coating as a two-coat system.

C. Maintain proper uniform wet-film thickness during application to ensure performance characteristics desired.

D. Apply coating using consistent application techniques to achieve uniform color and texture.

## 3.6 PROTECTION

A. Protect applied coating from damage during construction.

**END OF SECTION**

# Section 07180

# Fluid Applied Traffic Rated Deck Coatings

## PART 1 - GENERAL

### 1.1 SUMMARY

**SECTION INCLUDES:** Application of high-solids, fluid-applied, polyurethane, waterproofing, traffic-bearing, membrane deck coating system to all new concrete flatwork surfaces on the project. See architectural drawing a-601 for color schemes. Final colors to be approved by architect or engineer.

### 1.2 SUBMITTALS

A. Comply with Section [01 33 00].

B. Product Data: Submit manufacturer's technical data sheets for each product. All products must show evidence of compatibility with the proposed joint sealants under Section 07920.

C. Submit list of project references as documented in this Specification under Quality Assurance Article. Include contact name and phone number of person charged with oversight of each project.

D. Quality Control Submittals:

1. Provide protection plan of surrounding areas and non-cementitious surfaces.

### 1.3 QUALITY ASSURANCE

A. Comply with Section [01 40 00].

B. Qualifications:

1. Manufacturer Qualifications: Company with minimum 15 years of experience in manufacturing of specified products.

2. Manufacturer Qualifications: Company shall be ISO 9001:2000 Certified.

C. Applicator Qualifications:

1. Company with minimum of 5 years' experience in application of specified products on projects of similar size and scope, and is acceptable to product manufacturer.

a. Successful completion of a minimum of 5 projects of similar size and complexity to specified Work.

D. Field Sample and Mock-Up:

1. When construction progress allows, perform mock-up of required deck coatings on the concrete mock-up sample panel required by Specification Section 03300 – Cast-in-Place Concrete. The concrete mock up panel will be jointed and tooled in such a fashion as to allow for each of the deck coating colors to be used. Coordinate mock-up areas and colors with architect/engineer.
2. Manufacturer's representative or designated representative will review technical aspects; surface preparation, repair, and workmanship.
3. Field sample will be standard for judging workmanship on remainder of Project. Maintain field sample during construction for workmanship comparison.
4. Do not alter, move, or destroy field sample until Work is completed and approved by Architect.
5. Obtain Architect's written approval of field sample before start of material application, including approval of aesthetics, texture, and appearance.

## 1.4 DELIVERY, STORAGE, AND HANDLING

A. Comply with manufacturer's ordering instructions and lead-time requirements to avoid construction delays.

B. Deliver materials in manufacturer's original, unopened, undamaged containers with identification labels intact.

C. Store in unopened containers at 60 to 80 degrees F (16 to 27 degrees C) in clean, dry conditions.

## 1.5 PROJECT CONDITIONS

A. Environmental Requirements:

1. Ensure ambient, surface, aggregate, and epoxy temperatures are minimum of 50 degrees F (10 degrees C) and rising at time of application.
2. Do not apply material when rain is expected within 12 hours after application.

# PART 2 - PRODUCTS

## 2.1 MANUFACTURERS

A. Subject to compliance with requirements, provide products from the following manufacturer (or approved equal):

BASF Corporation

Construction Chemicals

Customer Service: 800- 433-9517
Technical Service: 800-243-6739
Internet: www.master-builders-solutions.basf.us

B. Substitutions: Other manufacturers shall comply with minimum levels of material and detailing indicated in Specifications or on Drawings. Architect will be sole judge of appropriateness of substitutions.

## 2.2 MATERIALS

A. MasterSeal 350 100% solids epoxy

B. MasterSeal TC 295 two-component, aliphatic, 100 percent solids, polyurethane, waterproofing top coat.

C. MasterSeal 941 Aggregate or approved equal

# PART 3 - EXECUTION

## 3.1 EXAMINATION

## 3.2 SURFACE PREPARATION

A. Protection: Protect adjacent Work areas and finish surfaces from damage during overlay application.

B. Prepare surfaces in accordance with manufacturer's instructions.

C. Steel Preparation:

1. Shotblast steel substrates and clean to meet SSPC-SP10, with a minimum 4-mil (0.2-mm) profile.
2. Reblast surface if flash rust appears.

D. Concrete Preparation:

1. Ensure concrete surface is clean, dry, and free of oil, contaminants, laitance, and debris. Cure concrete for a minimum of 28 days. All new concrete shall have a light broom finish. Patch or repair concrete delaminations, spalls, and cracks with repair product approved by overlay manufacturer.
2. Mechanically prepare surface to expose coarse aggregate and remove loose materials.
3. Meet requirements of ICRI Guideline No. 03732 Standard CSP 6. Perform direct tension testing in accordance with ACI 503, Appendix A every 4,500 sq ft (414 $m^2$) to ensure proper surface preparation.

## 3.3 MIXING

A. Mix materials in accordance with manufacturer's instructions.

B. Precondition materials to temperatures in accordance with manufacturer's instructions before mixing.

## 3.4 APPLICATION

A. Apply materials in accordance with manufacturer's instructions.

B. Precondition materials to temperatures in accordance with manufacturer's instructions before applying.

C. Overlay by Broadcast-Aggregate Method: Spread mixed overlay material onto substrate at a rate of 40 sq ft per gallon (1.0 $m^2$/L) or 2.5 gallons per 100 sq ft. Place epoxy to permit a continuous operation. Apply second mix immediately behind first mix. Begin aggregate broadcast immediately, but stop to maintain a wet edge. Broadcast aggregate to complete saturation (approximately 1.1 lb per sq. ft (5.4 kg/$m^2$). If wet spots develop, immediately broadcast additional aggregate until a dry surface is re-established.

D. Top Coat: Apply 20 wet mils of MasterSeal TC 295 Tint Base. Immediately backroll once and only once to level material.

E. Immediately broadcast aggregate at rate of 3 to 5 lbs per 100 sq ft (0.15 to 0.25 kg/$m^2$). Lightly backroll into top coat.

## 3.5 PROTECTION

A. Protect applied overlay from pedestrian traffic for 6 hours, depending on material, substrate, and air temperatures, in accordance with manufacturer's instructions.

B. Protect applied overlay from damage during construction.

**END OF SECTION**

# SECTION 09970
# STEEL COATINGS

## PART 1 - GENERAL

### 1.1 RELATED DOCUMENTS

**A.** Drawings and general provisions of the Contract, including General and Supplementary Conditions and Division 01 Specification Sections, apply to this Section.

### 1.2 SUMMARY

**A.** Section includes surface preparation of galvanized pavilion steel and the follow on application of a three coat finish system - comprised of a prime coat and two finish coats as listed in these specifications.

1. Pavilion Steel / Galvanized Metals.

**B.** Related Requirements:

1. Section 05120 "Structural Steel" for shop priming and galvanizing of metal substrates.

### 1.3 DEFINITIONS-Not Used

### 1.4 ACTION SUBMITTALS

**A.** Product Data: For each type of product intended for use. Include preparation requirements and application instructions.

**B.** Samples for Initial Selection: For each type of primer and topcoat product.

### 1.5 ATTIC STOCK - MAINTENANCE MATERIAL SUBMITTALS

**A.** Furnish extra materials, from the same product run, that match products installed and that are packaged with protective covering for storage and identified with labels describing contents.

1. Provide 5 gallons of primer and 5 gallons of finish paint at completion of project.

### 1.6 QUALITY ASSURANCE

**A.** Mockups: Prior to final paint selection the contractor shall perform a mock up of the intended paint system as directed by the Architect or Engineer. The mock-up will occur "in place" on the pavilion steel and, if satisfactory, will become a part of the finished work. Should the mock- up be disapproved additional efforts by the

contractor will be required until it is deemed satisfactory. The approved mock-up shall then set the standard for the follow on aesthetics and quality standards that are to be maintained throughout the remainder of the project.

## 1.7 DELIVERY, STORAGE, AND HANDLING

**A.** Store materials not in use in tightly covered containers in well-ventilated areas with ambient temperatures continuously maintained at not less than 45 deg F.

1. Maintain containers in clean condition, free of foreign materials and residue.
2. Remove rags and waste from storage areas daily.

## 1.8 FIELD CONDITIONS

**A.** Apply paints only when temperature of surfaces to be painted and ambient air temperatures are between 50 and 95 deg F.

**B.** Do not apply paints in blowing winds, rain, fog, or mist; when relative humidity exceeds 85 percent; at temperatures less than 5 deg F above the dew point; or to damp or wet surfaces.

# PART 2 - PRODUCTS

## 2.1 MANUFACTURERS

**A.** Manufacturers: Subject to compliance with requirements, available manufacturers offering products that may be incorporated into the Work include, but are not limited to, the following

1. Benjamin Moore & Co.
2. Farrell-Calhoun.S
3. The Sherwin-Williams Company.

**B.** Products: Subject to compliance with requirements, available products that may be incorporated into the Work include, but are not limited to products listed in the Part 3 Exterior Painting Schedule at the end of this Section.

## 2.2 PAINT, GENERAL

**A.** MPI Standards: Provide products that comply with MPI standards indicated and that are listed in its "MPI Approved Products List."

**B.** Material Compatibility:

1. Provide materials for use within each paint system that are compatible with one another and substrates indicated, under conditions of service and application as demonstrated by manufacturer, based on testing and field experience.
2. For each coat in a paint system, provide products recommended in writing by manufacturers of topcoat for use in paint system and on substrate indicated.

**C.** VOC Content: Provide materials that comply with VOC limits of authorities having jurisdiction.

**D.** Colors: As indicated in a color schedule.

## PART 3 - EXECUTION

### 3.1 EXAMINATION

A. Examine substrates and conditions, with Applicator present, for compliance with requirements and other conditions affecting performance of the Work.

B. Verify suitability of substrates, including surface conditions and compatibility with existing finishes and primers.

C. Proceed with coating application only after unsatisfactory conditions have been corrected.

1. Application of coating indicates acceptance of surfaces and conditions.

### 3.2 PREPARATION

A. Comply with manufacturer's written instructions and recommendations in "MPI Manual" applicable to substrates and paint systems indicated.

B. Clean substrates of substances that could impair bond of paints, including dust, dirt, oil, grease, and incompatible paints and encapsulants.

1. Remove incompatible primers and reprime substrate with compatible primers or apply tie coat as required to produce paint systems indicated.

C. Shop-Primed Steel Substrates: Clean field welds, bolted connections, and abraded areas of shop paint, and paint exposed areas with the same material as used for shop priming to comply with SSPC-PA 1 for touching up shop-primed surfaces.

D. Galvanized-Metal Substrates: Remove grease and oil residue from galvanized sheet metal by mechanical and/or chemical methods to produce clean, lightly etched surfaces that promote adhesion of subsequently applied paints. All welds, abraisions and imperfections contained on the galvanized surfaces shall be adequately touched up in accordance with manufacturers recommendations.

### 3.3 APPLICATION

A. Apply paints according to manufacturer's written instructions and recommendations in "MPI Manual."

1. Use applicators and techniques suited for paint and substrate indicated.
2. Paint pavilion steel surfaces prior to the installation of the prefinished wood

decking.

B. Tint undercoats same color as topcoat, but tint each undercoat a lighter shade to facilitate identification of each coat if multiple coats of same material are to be applied. Provide sufficient difference in shade of undercoats to distinguish each separate coat.

C. If undercoats or other conditions show through topcoat, apply additional coats until cured film has a uniform paint finish, color, and appearance.

D. Apply paints to produce surface films without cloudiness, spotting, holidays, laps, brush marks, roller tracking, runs, sags, ropiness, or other surface imperfections. Cut in sharp lines and color breaks.

## 3.4 FIELD QUALITY CONTROL

A. Dry Film Thickness Testing: Owner may engage the services of a qualified testing and inspecting agency to inspect and test paint for dry film thickness.

1. Contractor shall touch up and restore painted surfaces damaged by testing.
2. If test results show that dry film thickness of applied paint does not comply with paint manufacturer's written recommendations, Contractor shall pay for testing and apply additional coats as needed to provide dry film thickness that complies with paint manufacturer's written recommendations.

## 3.5 CLEANING AND PROTECTION

A. At end of each workday, remove rubbish, empty cans, rags, and other discarded materials from Project site.

B. After completing paint application, clean spattered surfaces. Remove spattered paints by washing, scraping, or other methods. Do not scratch or damage adjacent finished surfaces.

C. Protect work of other trades against damage from paint application. Correct damage to work of other trades by cleaning, repairing, replacing, and refinishing, as approved by Architect, and leave in an undamaged condition.

D. At completion of construction activities of other trades, touch up and restore damaged or defaced painted surfaces.

## 3.6 EXTERIOR PAINTING SCHEDULE

A. Provide the following Benjamin Moore paint systems for the pavilion steel, as indicated:

1. Ferrous and Galvanized Coated Metal
   a. Prime Coat: Corotech Acrylic Metal Primer V110
   b. Intermediate Coat: Ultra Spec HP D.T.M. Acrylic Semi-Gloss Enamel,

HP29

c. Topcoat: Ultra Spec HP D.T.M. Acrylic Semi-Gloss Enamel, HP29

B. Provide the following Ferrell-Calhoun paint systems for the pavilion steel substrates, as indicated:

1. Ferrous and Galvanized Coated Metal

a. Prime Coat: F/C #5-56 Waterborne 100% Acrylic All Purpose Metal Primer (1.8 mils DFT)

b. Intermediate Coat: F/C Tuff-Boy 8000 Line Waterborne 100% Acrylic DTM (1.7 mils DFT)

c. Topcoat: F/C Tuff-Boy 8000 Line Waterborne 100% Acrylic DTM (1.7 mils DFT)

C. Provide the following Sherwin-Williams paint systems for the pavilion steel, as indicated:

1. Ferrous and Galvanized Coated Metal

a. Prime Coat: S-W ProCryl® Universal Primer, B66-310 Series (2.0-4.0 mils dry)

b. Intermediate Coat: Sher-Cryl™ HPA Acrylic, B66-350 Series (2.5-4.0 mils dry)

c. Topcoat: Sher-Cryl™ HPA Acrylic, B66-350 Series (2.5-4.0 mils dry)

**END OF SECTION**

# SECTION 16010
# BASIC ELECTRICAL REQUIREMENTS

## PART 1 - GENERAL

### 1.1 SUMMARY

Provisions of Division 01 apply to this section

A. Section Includes: This section provides basic electrical requirements.

### 1.2 BASIC ELECTRICAL REQUIREMENTS

A. Quality Assurance:

1. Workers possessing the skills and experience obtained in performing work of similar scope and complexity shall perform the Work of this Division.

2. Refer to other sections of the Specifications for other qualification requirements.

B. Drawings and Specifications Coordination:

1. For purposes of clearness and legibility, Drawings are essentially diagrammatic and the size and location of equipment is indicated to scale whenever possible. Verify conditions, dimensions, indicated equipment sizes, and manufacturer's data and information as necessary to install the Work of this Division. Coordinate location and layout with other Work.

2. Drawings indicate required size and points of termination of conduits, number and size of conductors, and diagrammatic routing of conduit. Install conduits with minimum number of bends to conform to structure, avoid obstructions, preserve headroom, keep openings and passageways clear, and comply with applicable code requirements.

3. Routing of conduits may be changed provided that the length of any conduit run is not increased more than 10 percent of length indicated on the Drawings.

4. Outlet locations shall be coordinated with architectural elements prior to start of construction. Locations indicated on the Drawings may be distorted for clarity.

5. Coordinate electrical Work with all other Work.

6. The scope of the electrical work includes furnishing, installing testing and

warranty of all Electrical work and complete electrical systems shown on the electrical drawings and specified herein.

7. The drawings and specifications complement each other and together complete the contract documents for the electrical work included in this project. Neither the drawings or the specifications are complete without the other. Any item mentioned in either document is binding. Where conflicts arise between the drawings and the specifications, the more stringent requirement shall prevail.

8. The contractor shall provide and install all electrical systems to provide a complete package as indicated by the contract documents. The documents are intended to provide an outline for the required installations. The contractor shall ultimately provide a complete and operational system at the conclusion of the project.

9. Details are provided as they relate to the installation. Contractor shall provide and install all miscellaneous components, parts, materials, fasteners, splices, and any other incidental items necessary to provide a complete installation.

10. Free standing electrical equipment and transformers shall be installed on housekeeping pads. Pads shall be a minimum of 3" thick with #2 rebar grid at 6" on-center. Pads shall be a minimum of 2" larger in each direction than the width and depth of the equipment. All pads shall have a minimum of ¾" chamfer on all edges and broom finished. Crown pads slightly so as not to hold water where they are installed outdoors. Adjust pads dimensions and construction details where noted specifically on drawings.

C. Terminology:

1. Low Voltage: Applies to signal systems operating at 120 volts and less, and power systems operating at less than 600 volts.

2. UL: Underwriter's Laboratories Inc, Nationally Recognized Testing Laboratory (NRTL), or equal.

D. Regulations: Work shall comply with the requirements of authorities having jurisdiction and the Electrical and Building Codes. Material shall conform to regulations of the National Board of Fire Underwriters for electrical wiring and apparatus. Materials shall be new and listed by UL, or another NRTL.

E. Structural Considerations for Conduit Routing:

1. Where conduits pass through or interfere with any structural member, or

where notching, boring or cutting of the structure is necessary, or where special openings are required through walls, floors, footings, or other buildings elements, contractor shall submit shop drawings to the architect for approval.

F. Electrically Operated Equipment and Appliances:

1. Furnished Equipment and Appliances:

a. Work shall include furnishing and installing wiring enclosures for, and the complete connection of electrically operated equipment and appliances and electrical control devices which are specified to be furnished and installed in this or other sections of the Specifications, wiring enclosures shall be concealed except where exposed Work is indicated on the Drawings.

b. Connections shall be provided as necessary to install equipment ready for use. Equipment shall be tested for proper operation.

2. Equipment and Appliances Furnished by Others:

a. Connections to equipment furnished under this Division shall be part of the Work of this section. Work shall include internal wiring, installation, connection and adjustment of equipment furnished with factory installed internal wiring, except as further limited by Drawings and this Specification.

G. Protection of Materials:

1. Protect materials and equipment from damage and provide adequate and proper storage facilities during progress of the Work. Damaged materials and/or equipment shall be replaced.

H. Cleaning:

1. Exposed parts of Work shall be left in a neat, clean, usable condition. Finished painted surfaces shall be unblemished and metal surfaces shall be polished.

2. Thoroughly clean parts of apparatus and equipment. Exposed parts to be painted shall be thoroughly cleaned of cement, plaster, and other materials. Remove grease and oil spots with solvent. Such surfaces shall be wiped and corners and cracks scraped out. Exposed rough metal shall be smooth, free of sharp edges, carefully steel brushed to remove rust and other spots, and left in proper condition to receive finish painting.

3. Remove rubbish, debris, and waste materials and legally dispose of off the Project site.

I. Permits and Regulations:

1. Include payment of all permit and inspection fees applicable the work in this Division.

2. Work must conform to the National Electric Code, National Electrical Safety Code, and other applicable local, state, and federal laws, ordinances, and regulations. Where drawings or specifications exceed code requirements, the drawings and specifications shall govern. No work shall be installed which is less than minimum legal standards.

3. All work performed under this Division shall be inspected and approved by the Local Authority having Jurisdiction.

J. Site Inspection:

1. Each and all bidders shall inspect the project site prior to bidding.

2. Existing site conditions shall be compared with the information shown on the drawings. Immediately report any discrepancies to the Architect. After project bid date, no allowances will be made for failure to have made inspections.

3. During construction, the contractor shall exercise care and take appropriate precautionary measures to prevent any damage to the existing structures, sidewalks, utilities, communications, etc. during the project. The Contractor shall correct all damage caused by or during the project. Contractor shall provide not less than (2) and not more than (10) working days advance written, electronic, or telephonic notice of the commencement, extent, location and duration of the excavation work to Mississippi One-Call System, Inc. (1-800- 227-6477) and any nonmembers operator(s) of any underground utility lines or underground facilities in and near the excavation area, so that Mississippi One- Call System, Inc operator(s) and any non-member operator(s) may locate and mark the location of underground utility lines and underground facilities in the excavation area.

K. Utility Coordination:

1. Contractor shall inspect and verify the existing utilities at the project site prior to bidding.

2. The Contractor must coordinate with owner during the project for

connection of permanent power to the facility and fixtures, however, the contractor shall not utilize the permanent utilities unless written permission is granted by the owner. The local utility and authority having jurisdiction shall approve when permanent power may be installed in order to provide electrical start-up and check-out of equipment. Upon written permission of use of permanent electrical power, contractors shall pay any charges for power consumption while utilizing permanent power until the building or facility has been accepted by the owner.

L. Temporary Lighting and Power for Construction:

1. If required, the electrical contractor shall provide and install temporary lighting during the period of construction. Temporary lighting shall be provided to meet all local ordinances, codes, and safety requirements. Lighting shall be installed in all open, general, and thoroughfare areas of construction. This shall not include any task lighting specifically required by any trade to complete their work or installations.

2. If required, the electrical contractor shall provide and install temporary power during the construction period as required to complete the project installation. Contractor shall coordinate with the general contractor, utility company, and/or owner to provide 120/240 volt power for the project. All devices shall be provided with ground fault circuit protection. Power shall be provided in central work area(s). This shall not include any remote power needs for any specific trades. For power requirements at voltages other than those listed above, the contractor shall coordinate connection requirements with the local utility company.

3. All temporary lighting and power installations shall meet local and national codes and be approved by the local authority having jurisdiction.

4. Temporary services shall be removed at completion of the project. Permanent utilities shall not be used during the Project except with the written permission of the Owner.

## 1.3 SUBMITTALS

A. Where indicated submit to architect, (7) copies of Shop Drawings including control diagrams, list of materials, catalog cuts, technical data, manufacturer's specifications, and applicable installation details.

## 1.4 RECORD DRAWINGS

A. The Electrical Contractor shall maintain, at the project site, a separate set of prints

of the contract documents and shall show all changes and variations, in a neat and clearly discernible manner, which are made during construction. Upon completion of the work, these drawings shall be turned over to the Architect. Provide the following as-built documents including all contract drawings regardless of whether corrections were necessary and include in the transmittal: "2 sets of CDs and prints for Owner's use, one set of CDs, prints for Architect / Engineers Records". Delivery of these as-built electronic files and prints are a condition of final acceptance.

## 1.5 OPERATION AND MAINTENANCE MANUALS

A. The Electrical Contractor shall submit to architect (3) copies each of operating and maintenance manuals for each piece of equipment applicable to the project.

B. All shop drawings, installation, operation, and maintenance manuals, wiring diagrams, parts lists, and other information including warranties and technical support, shall be obtained from each manufacturer.

C. Assemble all information into three-ring binders or other suitable binding. Add an index and/or tabbed and labeled sections of all items submitted.

D. The Electrical Contractor shall at all times, maintain a clean set of construction document plans on site. Any and all deviations from the construction documents shall be marked, and clearly noted in red ink. All changes shall exactly indicate the revisions or changes to the design documents. Upon completion of the project, (2) clean sets of "red-line" construction as-built documents shall be submitted to the architect. Unclear, illegible, or inaccurate plans will be returned to the contractor for correction and resubmission. As- built documents shall be corrected by the Electrical Contractor and resubmitted at no additional cost.

## 1.6 INSPECTIONS AND PUNCH LIST

A. The Electrical Contractor shall survey and inspect his work and develop his own punch list to confirm that work is complete and finished. He shall then notify the General Contractor that work is complete and ready for inspection by the Architect. It is not the Architects or Engineers obligation to perform a final inspection until the contractor states his work has been inspected and is complete and ready for final inspection.

B. Request to the Architect, Engineer, or Owner for final inspection may be accompanied by a limited list of known deficiencies with a brief explanation or status of deficiencies and schedule for completion of each. Correction of these items shall be completed within

(30) days of inspection or before final acceptance of occupancy.

## 1.7 WARRANTY

A. The Electrical Contractor shall warrant all workmanship, equipment, and materials installed under this contract for a period of (1) year minimum from the date of final acceptance as agreed between the Contractor and the Architect, unless indicated by other sections of these specifications.

B. Any equipment, materials, etc. proving to be defective during the warranty period shall be corrected or replaced without any expense to the Owner or other parties. This provision shall not be construed to include general maintenance items or luminaire lamps or correcting errors on the part of the owner, owner's personnel, or owner's representative.

# PART 2 – PRODUCTS

## 2.1 MATERIALS AND EQUIPMENT

A. Materials and Equipment furnishes under this contract shall be in strict accordance with the specifications and drawings and shall be new and of best grade and quality. When two or more items of equal and similar materials and construction are required, they shall be of the same manufacturer.

B. All electrical equipment and materials shall bear the Underwriters Laboratories, Inc. label, and shall comply with the NEC and NFPA requirements as applicable.

## 2.2 MATERIALS AND EQUIPMENT SELECTION

A. Selection of Materials and Equipment furnished under this contract shall be determined by the following:

1. Where trade names, brands, and manufacturer's part numbers are listed, the exact equipment shall be furnished. Where more than one name is used, the contractor shall have the option of selecting between those specified. All products used shall be equal to that specified and shall be of best quality.

2. When the words "or equal" appear, specific approval must be obtained from the Architect during the bidding period in sufficient time to be included in an addendum. The same shall apply for equipment and materials not named in the specifications, where approval is sought.

3. Alternate materials and/or equipment must be submitted for approval a minimum 2 weeks prior to project bid date.

B. Before bidding, when preparing shop drawings, and prior to rough-in for installation, the contractor shall verify that adequate space is available for entry and installation of the item including any accessories. Also, that adequate space is available for servicing equipment and required code clearances are satisfied.

## PART 3 - EXECUTION

### 3.1 GENERAL REQUIREMENTS

A. Advise the general contractor or architect before starting the Work of this Division.

B. Exposed conduits shall be painted to match the surfaces adjacent to installation. Refer to painting and coating section of specifications.

C. Salvaged materials, if applicable, removed from the project shall be removed from the Project site as required by the general contractor.

D. Trenches outside of barricade limits shall be backfilled and paved within 24 hours after being inspected. Provide traffic plates during the time that trenches are open in traffic areas and in areas accessible to nonconstruction personnel.

E. Where structural walls are cored for new conduit runs, separation between cored holes shall be 3 inches edge to edge, unless otherwise required by the Architect. All coring to be laid out and reviewed by Architect prior to drilling. Contractor to verify location of structural steel, rebar, stress cabling, or similar prior to lay out.

F. Electrical equipment shall be braced and anchored as indicated on the Drawings.

### 3.2 CLEANUP

A. Remove rubbish, debris and waste materials and legally dispose of off the Project site.

### 3.3 PROTECTION

A. Protect the Work of this section until Substantial Completion.

**END OF SECTION**

# SECTION 16050

# BASIC ELECTRICAL MATERIALS AND METHODS

## PART 1 - GENERAL

### 1.1 SUMMARY

A. Provisions of Division 01 apply to this section

B. Section Includes:

1. Boxes and enclosures.
2. Identifications and signs.

C. Related Sections:

1. Section 16010: Basic Electrical Requirements.

## PART 2 - PRODUCTS

### 2.1 BOXES, ENCLOSURES, KEYS AND LOCKS

A. Outlet Boxes and Fittings:

1. Outlet boxes installed in concealed Work shall be galvanized steel, pressed, or welded type, with knockouts.
2. Outlet boxes, where required, shall be suitable for installation in concrete.
3. In exposed Work, where conduit runs change direction or size, outlet boxes and conduit fittings shall be cast metal with threaded hubs cast integral with box or fitting.
4. Fittings shall be cast metal and non-corrosive. Ferrous metal fittings shall be cadmium-plated or zinc galvanized. Castings shall be true to pattern, smooth, straight, with even edges and corners, of uniform thickness of metal, and shall be free of defects.
5. Covers for fittings shall be galvanized steel or non-corrosive aluminum and shall be designed for particular fitting installed.
6. Light fixture outlets shall be 4-inch octagon, 4-inch square, 2-1/8 inches deep or larger, depending upon number of conductors or conduits therein. Plaster or tile rings shall be furnished for suitable mounting of light fixture.
7. Plaster or tile rings shall be provided on flush-mounted outlet boxes except where otherwise indicated or specified. Plaster or tile rings shall be same depth as finished surface. Install approved ring extension to obtain depth to finish surface.
8. Factory made knockout seals shall be installed to seal box knockouts, which

are not intact.

B. Junction and Pull boxes:

1. Junction and pull boxes, in addition to those indicated, shall only be used in compliance with codes, recognized standards, and Contract Documents.

2. Boxes shall be constructed of blue or galvanized steel with ample laps, spot welded, and shall be rigid under torsion and deflecting forces. Boxes shall be furnished with auxiliary angle iron framing where necessary to ensure rigidity.

3. Covers shall be fastened to box with a sufficient number of brass machine screws to ensure continuous contact all around. Flush type boxes shall be drilled and tapped for cover screws if boxes are not installed plumb. Surfaces of pull and junction boxes and covers shall be labeled in black marker ink designating system, panelboard and circuit designation contained in box. In exposed Work, designation shall be installed on inside of pull box or junction box cover.

4. Weatherproof NEMA 3R pull and junction boxes shall conform to foregoing with following modifications:

   a. Cover of flush mounting boxes shall be furnished with a weather-tight gasket cemented to, and trimmed even with, cover all around.

   b. Surface or semi-flush mounting pull and junction boxes shall be UL, or another Nationally Recognized Testing Laboratory (NRTL) listed as rain-tight and shall be furnished complete with threaded conduit hubs.

   c. Exposed portions of boxes shall be galvanized and finished with one prime coat and one coat of baked-on gray enamel, unless already furnished with factory baked-on finish.

5. Junction and pull boxes shall be rigidly fastened to structure and shall not depend on conduits for support.

6. Polymer Concrete Boxes:

   a. Polymer concrete boxes are to be made from aggregates in combination with polymer resin, combined and processed by mixing, molding, and curing, and reinforced with fiberglass.

   b. Boxes are to be high strength, impact resistant, corrosion resistant, nonflammable, and noncorrosive.

   c. Enclosures, boxes and covers are required to conform to all test provisions of the most current ANSI/SCTE77 “Specification For

Undergroun Enclosure Integrity."

d. All components in an assembly (box & cover) are manufactured using matched surface tooling.

e. Covers shall be marked as electrical, power, communications, fiber, signal, etc. as required.

f. Bottom of box shall be filled with 6" of pea gravel where boxes are installed with open bottom.

g. Boxes embedded in concrete shall have a solid bottom.

h. Cut-outs for conduits shall be made with proper tools for smooth, circular cuts. Seal around cuts-outs after conduits are installed.

**2.2 IDENTIFICATION AND SIGNS**

A. Identification Plates:

1. Provide identification plates for the following unless otherwise specified, for disconnect switches.

2. Identification plates shall be of plastic stock and shall adequately describe function, voltage and phase of identified equipment.

3. Identification plates shall be black-and-white nameplate stock of bakelite with characters cut through black exposing white. Plates shall be furnished with beveled edges and shall be securely fastened in place with No. 4 Phillips-head, cadmium-plated steel, self-tapping screws. Characters shall be 3/16 inch high, unless otherwise indicated.

**PART 3 - EXECUTION**

**3.1 INSTALLATION AND SUPPORT OF BOXES**

A. Install outlet boxes flush and plumb with finished surface of column.

B. Install pull boxes flush with grade or with finished concrete. Provide pea gravel in bottom of open boxes as noted in these specifications.

**3.2 IDENTIFICATION OF CIRCUITS AND EQUIPMENT**

A. Provide descriptive nameplates or tags permanently attached to disconnect switches.

B. Update circuit identification cards and cardholders in all panel boards.

C. Junction and pull boxes shall have covers stenciled with box number when indicated on Drawings, or circuit numbers according to panel schedules.

**3.3 PROTECTION**

A. Protect Work of this section until Substantial Completion.

## 3.4 CLEANUP

A. Remove rubbish, debris, and waste materials and legally dispose of off Project site.

**END OF SECTION**

# SECTION 16060
# GROUNDING AND BONDING

## PART 1 - GENERAL

1.1 SUMMARY

A. Provisions of Division 01 apply to this section

B. Section Includes: Provide and install grounding system as indicated or required.

C. Related Sections:

1. Refer to related sections for their system grounding requirements.
2. Section 16010: Basic Electrical Requirements.

1.2 QUALITY ASSURANCE

A. Reference Standards:

1. IEEE 142 Green Book.
2. Underwriter's Laboratories (UL).
3. National Electrical Code.
4. Building Industry Consultant Services International (BICSI) (Signal).
5. EIA/TIA (Signal and power).
6. Nationally Recognized Testing Laboratory (NRTL) or equal.

1.03 SYSTEM DESCRIPTION

A. Metallic objects on the Project site that enclose electrical conductors, or that are likely to be energized by electrical currents, shall be effectively grounded.

B. Metal equipment parts, such as enclosures, raceways, and equipment grounding conductors, and earth grounding electrodes shall be solidly joined together into a continuous electrically conductive system.

C. Electrical continuity to ground metal raceways and enclosures, isolated from equipment ground by installation of non-metallic conduit or fittings, shall be provided by a green insulated grounding conductor of required size within each raceway connected to isolated metallic raceways, or enclosures at each end. Each flexible conduit over 6 feet in length shall be provided with a green insulated grounding conductor of required size.

D. Non-current carrying metal parts of enclosures and poles, shall be permanently and effectively grounded. Provide a NEC sized grounding conductor in every raceway.

1.04 SUBMITTALS

A. None.

## PART 2 - PRODUCTS

2.1 MATERIALS

A. Grounding conductors shall be copper, #12 minimum with green insulation, unless noted otherwise.

B. Ground tails shall be copper, #12 minimum with green insulation, installed in all metallic junction boxes where devices are being installed. Branch circuit ground, junction box, and devices shall be bonded at each junction box.

## PART 3 - EXECUTION

3.01 INSTALLATION

A. All grounding shall be installed in accordance with details on drawings and per NEC 250.

B. All conduits shall have a grounding conductor, minimum #12 copper. Conductor size shall be increased based on ampacity and/or phase conductors of the circuit.

C. All branch circuit, device, and junction boxes shall contain a grounding conductor, minimum #12 copper with green insulation, to bond the one or more equipment grounding conductors and the metal box. Connections shall be made to splice the equipment grounding conductors, grounding pig-tail, and metal box by means of a grounding screw or listed grounding device.

3.02 TESTING

A. Visually and mechanically examine ground system connections for completeness and adequacy.

3.03 PROTECTION

A. Protect the Work of this section until Substantial Completion.

3.04 CLEANUP

A. Remove rubbish, debris, and waste materials and legally dispose of off the Project site.

END OF SECTION

# SECTION 16120
# LOW-VOLTAGE CONDUCTORS (600 VOLT AC)

## PART 1 - GENERAL

1.01 SUMMARY

A. Provisions of Division 01 apply to this section

B. Section Includes: Low-voltage wire, splices, terminations and installation.

1.02 SUBMITTALS

A. None.

## PART 2 - PRODUCTS

2.1 WIRES

A. Wires shall be single conductor type THHN or THWN insulated with polyvinyl chloride and covered with a protective sheath of nylon, rated at 600 volts. Wires may be operated at 90 degrees C. maximum continuous conductor temperature in dry locations, and 75 degrees C. in wet locations and shall be listed by UL Standard 83 for thermoplastic insulated wires, listed by Underwriter's Laboratories (UL) for installation in accordance with Article 310 of the National Electrical Code (NEC). Conductors shall be solid or stranded copper for 12 AWG and smaller conductors, and stranded copper for 10 AWG and larger conductors. Conductors shall be insulated with PVC and sheathed with nylon. Wires shall be identified by surface markings indicating manufacturer's identification, conductor size and metal, voltage rating, UL symbol, type designations and optional rating. Indentations for lettering is not permitted. Wires shall be tested in accordance with the requirements of UL standard for types THWN, or THHN.

B. Conductors shall be solid Class B or stranded Class C, annealed uncoated copper in accordance with UL standards, or another Nationally Recognized Testing Laboratory (NRTL).

2.02 STANDARDS

A. THWN/THHN wires shall comply with the following standards:

1. UL 83 for thermoplastic insulated wires.
2. UL 1063 for machine tool wires and cables.

## PART 3 - EXECUTION

3.1 INSTALLATION

A. Wires shall not be installed until debris and moisture is removed from conduits, boxes, and cabinets. Wires stored at site shall be protected from physical damage until they are installed and walls are completed.

B. Wire-pulling compounds furnished as lubricants for installation of conductors in raceways shall be compounds approved and listed by UL, NRTL, or equal. Oil, grease, graphite, or similar substances are not permitted. Pulling of 2 AWG or larger conductors shall be performed with a cable pull machine. Any runs shorter than 50 feet are exempt. When pulling conductors, do not exceed manufacturer's recommended values

C. Pressure cable connectors, pre-insulated Scotchlok, 3M, or equal, Y, R or B spring-loaded twist-on type, may be furnished in splicing number 8 AWG or smaller wires for wiring systems; except public address and telephone systems.

D. Connection of any bonding or grounding conductors shall be securely bolted together with corrosion-resistant plated carbon steel, minimum grade 5 machine screws secured with constant pressure-type locking devices.

E. Wiring in pull boxes, and cabinets shall be neatly grouped and tied in bundles with nylon ties at 10-inch intervals.

F. Install conductor lengths with a minimum length within the wiring space. Conductors must be long enough to reach the terminal location in a manner that avoids strain on the connecting lug.

G. Maintain the conductor required bending radius.

H. Neutral conductors larger than 6 gauge, which are not color identified throughout their entire length, shall be taped, painted white or natural gray, or taped white where they appear in cabinet, gutters or pull boxes. Neutral conductors 6 gauge and smaller shall be white color identified throughout their entire length.

I. Wiring systems shall be free from short circuits and grounds, other than required grounds.

3.2 COLOR CODES

A. General Wiring:

1. Color code conductor insulation as follows:

| SYSTEM VOLTAGE | |
|---|---|
| Conductor | 120/240 |
| Phase A | Black |
| Phase B | Red |
| Neutral | White |

2. For phase and neutral conductors 6 gauge or larger, permanent plastic-colored tape may be furnished to mark conductor end instead of coded insulation. Tape shall cover not less than 2 inches of conductor insulation within enclosure.

3.3 FEEDER IDENTIFICATION

A. Feeder wires and cables shall be identified at each point the conduit run is broken by a cabinet, box, gutter, etc. Where terminal ends are available, identification shall be by

means of heat shrink wire markers, which provide terminal strain relief. Markers shall be Brady Perma-Sleeve, or equal. Identification in other areas shall be by means of wrap-around tape markers Brady Perma-Code or equal. Markers shall include feeder designation, size, and description.

3.4 TAPE AND SPLICE KITS

A. Splices, joints, and connectors joining conductors in dry and wet locations shall be covered with insulation equivalent to that provided on conductors. Free ends of conductors connected to energized sources shall be taped. Voids in irregular connectors shall be filled with insulating compound before taping. Thermoplastic insulating tape approved by UL, NRTL, or equal for installation as sole insulation of splices shall be furnished and shall be installed according to manufacturer's printed specifications.

B. Conductors in pull boxes shall be spliced using insulated terminal lugs with complete factory applied insulating material around all metallic components. Wiring terminations shall be secured with screw tight lug terminals.

3.5 PROTECTION

A. Protect the Work of this section until Substantial Completion.

3.6 CLEANUP

A. Remove rubbish, debris and waste materials and legally dispose of off the Project site.

END OF
SECTION

# SECTION 16130

# RACEWAYS, FITTINGS, AND SUPPORTS

## PART 1 - GENERAL

### 1.1 SUMMARY

A. Provisions of Division 01 apply to this section

B. Section Includes:

1. Raceways and wire ways
2. Conduit installation.
3. Underground requirements.

C. Related Sections:

1. Section 16010: Basic Electrical Requirements.
2. Section 16050: Basic Electrical Materials and Methods

D. Applicable Standards and Codes

1. EIA/TIA 569 Standards.
2. National American Standards Institute (ANSI)
3. National Electrical Manufacturer's Association (NEMA)
4. Nationally Recognized Testing Laboratory (NRTL)
5. National Electrical Code (NEC)
6. Underwriters Laboratory (UL)

### 1.2 SUBMITTALS

A. None.

## PART 2 - PRODUCTS

### 2.1 RACEWAYS

A. Conduit Materials:

1. Metallic conduit, and tubing shall be manufactured under the supervision of an UL, or another NRTL factory inspection and label service program. Each 10- foot length of conduit and tubing shall bear the UL or another NRTL label and manufacturer's name.

   Rigid metallic conduit shall be rigid steel, heavy wall, mild steel, zinc-coated, with an inside and outside protective coating manufactured in accordance with ANSI C 80.1. Couplings, elbows, bends, condulets,

bushings and other fittings shall be the same materials and finish as the rigid metallic conduit. Fittings, connectors, and couplings shall be threaded type, manufactured in accordance with ANSI C 80.1 and UL 6.

2. Electrical metallic tubing is not allowed.

3. Liquid-tight flexible metal conduit shall be galvanized heavy wall, flexible locked metallic strip construction, UV rated, with smooth moisture and oil-proof, abrasion-resistant, extruded plastic jacket. Connectors shall be as required for installation with liquid-tight flexible conduit and shall be installed to provide a liquid-tight connection.

4. Non-metallic conduit shall be rigid PVC electrical conduit extruded to schedule 40 dimensions of Type II. Grade 1 high impact, polyvinyl chloride, sweeps, couplings, reducers and terminating fittings shall be listed under the UL, or another NRTL, and shall bear the manufacturer's listed marking. Schedule 80 conduits shall be utilized where noted on drawings.

5. Fittings and all hardware shall be 316 stainless steel where installed exposed in all parts of the project.

6. Conduit size shall be 1/2" minimum for above grade installations and 3/4" minimum for below grade or in-slab installations. Refer to drawings for specific conduit sizes.

7. Metal Clad (MC) cable system is not allowed.

B. Sleeves for Conduits: Sleeves shall be adjustable type, of 26 gage galvanized iron, Adjust-to Crete Co. Adjust-to-Crete, or Jet Line Products Inc. Jet-Line, or equal.

C. Where conduit enters a building through a concrete foundation below grade, or ground water level, or where it is necessary to seal around a conduit where it passes through a concrete floor or wall, provide O-Z/Gedney Type FSK Thru Wall and Floor Seal, or equal.

D. Wireways shall be 16 gage galvanized steel enclosed hinge/screw wiring troughs, surface metal raceway, wireway, and auxiliary gutter designed to enclose electrical wiring. Wireway fittings shall be furnished with removable covers and sides to permit complete installation of conductors throughout the entire wireway run. Cover shall be furnished with keyhole slots to accept captive screws locking the cover securely closed. Wireways shall be UL or another NRTL listed, and shall be Square D Type LDG NEMA-1 enclosure for interior applications, or Type RD NEMA-3R enclosure for exterior applications, or equal by Cooper B-line, Hoffman, Wire Guard, or Circle AW.

E. Penetration: Provide 3M, or equal, caulk and barriers for installing seals around

penetrations through floors or boxes. Caulk must be UL, or another NRTL listed, and classified for through-penetration applications of conduits and busways.

F. Pull Wires: Install 1/8 inch polypropylene cords in empty or spare conduits.

## PART 3 - EXECUTION

### 3.1 CONDUIT INSTALLATION

A. General Requirements:

1. Provide complete and continuous systems of rigid metallic conduit, boxes, junction boxes, fittings and cabinets for systems of electrical wiring including lighting, power, and systems, except as otherwise specified.

2. EMT shall not be utilized for any installation.

3. Liquid-tight flexible metallic conduit may be installed at exterior locations or where subject to liquid or oil exposure, except where otherwise specified, for final connection of equipment. Maximum length shall be 24 inches.

4. Connectors for liquid-tight flexible metallic conduit shall be compatible with the conduit, and of the types which threads into convolutions of conduit. Connectors for watertight flexible metal conduit shall be as required for installation and shall be installed to provide a watertight connection.

5. Exposed conduit shall be installed vertically and horizontally following the general configuration of the equipment, using cast threaded hub conduit fittings where required and shall be clamped to equipment with suitable iron brackets and two hole pipe strap.

6. If connection is from a flush wall-mounted junction box, install an approved extension box.

7. Underground feeder distribution conduits for systems may be non-metallic conduit or HDPE instead of rigid conduit except where otherwise specified or indicated.

8. Conduit shall be concealed unless otherwise indicated. Conduits exposed to view, shall be installed parallel or at right angles to structural members, columns, or lines of building. Conduits shall be installed to clear access openings.

9. Bends or offsets will not be permitted unless absolutely necessary.

Radius of each conduit bend or offset shall be as required by ordinance. Bends and offsets shall be performed with standard industry tools and equipment or may be factory fabricated bends or elbows complying with requirements for radius of bend specified. Heating of metallic conduit to facilitate bending is not permitted.

10. Running threads are not permitted. Provide conduit unions where union joints are necessary. Conduit shall be maintained at least 6 inches from covering of hot water and steam pipes and 18 inches from flues and breechings. Open ends of conduits shall be sealed with permitted conduit seals during construction of buildings and during installation of underground systems.

11. Expansion Joints/Seismic Separations/Separations between buildings/Locations Indicated: Provide Thomas & Betts XJG-TB, O-Z Electrical Mfg. Co. Inc. Type AX with bonding strap and clamps. At exterior locations, provide Thomas & Betts XJG-TB, O-Z Electrical Mfg. Co. Inc. Type EX, or equal. Provide O-Z Electrical Mfg. Co. Type AXDX, or equal Combination Deflection/Expansion Fitting at all seismic separations. Provide manufactures internal and external. Bonding Jumpers at all locations. Liquid-tight flexible conduit shall not be approved at expansion joints or seismic separations.

12. Conduits shall be supported as required by code, but not to exceed 10 feet. Where applicable, conduit needs to be rigidly supported every 5 feet and supported within 3 feet of every junction box, unless noted otherwise on drawings.

13. Where auxiliary supports, saddles, brackets, etc., are required to meet special conditions, they shall be fastened rigid and secure before conduit is attached.

14. Bushings and locknuts for rigid steel conduit shall be steel threaded insulating type. Setscrew bushings are not permitted.

15. Flex conduits shall be cut square and not at an angle.

16. Routing of conduits may be changed providing length of any conduit run is not increased more than 10 percent of the length indicated on Drawings.

B. Underground Requirements:

1. Underground conduits and raceways shall be buried to a depth of not less than 24 inches below finished grade to top of the conduit envelope, unless

otherwise specified.

2. Assemble sections of conduit with required fittings. Cut ends of conduit shall be reamed to remove rough edges. Joints in conduits shall be provided liquid-tight. Bends at risers shall be completely below surface where possible.

3. The architect or engineer will observe underground installations before and during conduit placement. A mandrel shall be drawn through each run of conduit in presence of the architect or engineer before and after placement. Mandrel shall be 6 inches in length minimum, and have a diameter that is within 1/4 inches of diameter of conduit to be tested.

4. Non-metallic conduit installations shall comply with following additional requirements. Joints in PVC conduit shall be sealed by means of required solvent-weld cement supplied by conduit manufacturer. Non-metallic conduit bends and deflections shall comply with requirements of applicable electrical code, except that minimum radius of any bend or offset for conduits sized from 1/2 inch to 1-1/2 inches inclusive shall not be less than 24 inches. Bends at risers and risers shall be galvanized, rigid steel conduit. Conduits below slab shall be painted with epoxy, resin paint.

5. All below grade non-metallic conduits shall have galvanized, rigid steel 90's painted epoxy, resin paint.

6. Furnish and install a 6-inch wide, polyethylene, red underground barrier tape 12 inches above full length of conduits reading, "CAUTION ELECTRIC LINE BURIED BELOW".

7. Underground conduit systems provided for utility companies shall be furnished to meet the requirements of the utility companies requiring service.

8. Protect inside of conduit and raceway from dirt and rubbish during construction by capping openings.

9. All underground conduits and raceways shall be swabbed prior to wire pull.

## 3.2 PROTECTION

A. Protect the Work of this section until Substantial Completion.

## 3.3 CLEANUP

A. Remove rubbish, debris and waste materials and legally dispose of off the Project site.

**END OF SECTION**

# SECTION 16446
# SAFETY SWITCHES

## PART 1 - GENERAL

1.1 SUMMARY

A. Provisions of Division 01 apply to this section

B. Section Includes: Lighting and power distribution facilities, including panelboards.

C. Related Sections:

1. Section 16010: Basic Electrical Requirements.
2. Section 16050: Basic Electrical Materials and Methods.
3. Section 16500: Lighting.

1.2 SUBMITTALS

A. Provide in accordance with Division 01.

B. Shop Drawings: Include a front elevation indicating cabinet dimensions, make, location and capacity of equipment, size of gutters, type of mounting, finish, and catalog number. General layout of internal devices, wiring drawings with wire numbers and device connections, vendor cut sheets of devices in enclosure and bill of materials listing description, manufacturer, part number, and quantity of items shall be included.

C. Installation Instructions: Submit manufacturer's written installation instructions.

1.3 DESIGN REQUIREMENTS

A. Safety Switches:

1. In accordance with UL 98, NEMA KS1, and NEC.
2. Shall be HP rated.
3. Fusible Switch, 600 amp and smaller: NEMA KS 1, Type HD, with clips or bolt pads to accommodate specified fuses or recommended fuses, lockable handle; interlocked with cover in closed position.
4. Shall have the following features:

   a. Switch mechanism shall be the quick-make, quick-break type.
   b. Copper blades, visible in the OFF position.
   c. An arc chute for each pole.
   d. External operating handle shall indicate ON and OFF position and have lock-open padlocking provisions.
   e. Mechanical interlock shall permit opening of the door only when the switch is in the OFF position, defeatable to permit inspection.
   f. Fuse holders for the sizes and types of fuses specified.

g. Electrically operated switches shall only be installed where shown on the drawings.
h. Solid neutral for each switch being installed in a circuit which includes a neutral conductor.
i. Ground lugs for each ground conductor.
j. Enclosures:
   i. Shall be the NEMA types shown on the drawings for the switches.
   ii. Where the types of switch enclosures are not shown, they shall be the NEMA types most suitable for the ambient environmental conditions. Unless otherwise indicated on the plans, all outdoor switches shall be NEMA 3R.
   iii. Shall be finished with manufacturer's standard gray baked enamel paint over pretreated steel (for the type of enclosure required).

## PART 2 - PRODUCTS

2.1 MANUFACTURERS

A. Equipment shall be manufactured by General Electric, Cutler Hammer, Square D, Siemens, or equal.

## PART 3 - EXECUTION

3.1 INSTALLATION

A. Equipment shall be located so it is readily accessible and not exposed to physical damage.

B. Equipment installed outdoors shall be specifically listed for wet locations and shall be weatherproof in NEMA Type 3R cabinets.

C. Disconnects/Safety switches shall be installed in the vertical position with "ON" at the up position and top of the switch.

D. Disconnects/Safety Switches shall be securely fastened to wall or structural member by at least 4 points.

E. Unused openings in cabinets and disconnects shall be effectively closed as required by the manufacturer.

F. Cabinets shall be grounded as specified in Article 250 of the National Electrical Code.

G. Conduits shall be installed so as to prevent moisture or water from entering and accumulating within the enclosure.

H. Lugs shall be suitable and listed for installation with the conductor being connected.

I. Conductor lengths shall be maintained to a minimum within the wiring gutter space. Conductors shall be long enough to reach the terminal location in a manner that avoids strain on the connecting lugs.

J. Maintain the required bending radius of conductors inside the cabinet.

K. Clean the cabinet of foreign material such as cement, plaster, and paint. Repaint to manufacturers original finish any blemishes that occur during construction.

L. Distribute and arrange conductors neatly in the wiring gutters.

M. Use the manufacturer's torque values to tighten lugs.

N. Before energizing, the following steps shall be taken:

1. Retighten connections to the manufacturer's torque specifications. Verify that required connections have been provided.
2. Remove shipping blocks and debris from component devices and switch interiors.
3. Manually exercise to verify operation.

O. Follow manufacturer's instructions for installation.

P. Do not install in highly corrosive environments, unless rated for the application.

3.2 PROTECTION

A. Protect the Work of this section until Substantial Completion.

3.3 CLEANUP

A. Remove rubbish, debris, and waste materials and legally dispose of off the Project site.

END OF
SECTION

# SECTION 16500
# LIGHTING

## PART 1 - GENERAL

1.1 SUMMARY

A. Provisions of the General and Supplementary Conditions and Division 01 apply to this section.

B. Section Includes: Furnishing and installing lighting fixtures, including lamps, ballasts/drivers, wiring, and lighting controls.

C. Light fixtures model numbers were determined at the time this specification was written; model numbers may need to be modified, or may require the addition or deletion of options to fully meet specification requirements.

D. Related Sections:

1. Section 16010: Basic Electrical Requirements
2. Section 16050: Basic Electrical Materials and Methods.

1.2 SUBMITTALS

A. Provide in accordance with Division 01.

B. List of Materials: Submit a complete list of materials proposed for this section.

C. Shop Drawings: Provide detailed and dimensioned Shop Drawings or manufacturer's data sheet with specific model and part numbers indicating kind, weight and thickness of materials, method of fitting and fastening parts together, location and number of sockets, size of lamps, and complete details of method of fitting suspension and fastening fixtures in place.

D. Submittals must comply with contract general provisions.

1.3 MOUNTING REQUIREMENTS

A. Design of lighting fixtures, accessories, supports, and method of fixture installation shall comply with requirements of ceiling type which fixture is installed.

1.4 QUALITY ASSURANCE

A. Components and fixtures shall be listed and approved for the intended application by Underwriter's Laboratories (UL), or other Nationally Recognized Testing Laboratory (NRTL).

B. Owners approval shall be obtained for any equipment or materials substitutions.

1.5 GUARANTEE

A. Provide a 1 year labor warranty.

B. Provide material warranty as specified:

1. Lamps: 1 years
2. Ballasts/Drivers: 5 years
3. Standards: 1 year

C. Warranty period begins at substantial completion or project acceptance for beneficial occupancy.

## PART 2 - PRODUCTS

### 2.1 MATERIAL AND FABRICATION

A. Lighting fixtures shall be the type indicated on Drawings and as specified. Fixtures of same type shall be of one manufacturer.

B. Fixtures shall be of the types and manufacturers described in the Luminaire Schedule of the Drawings, with lamps, wattage and voltage as indicated. Alternate fixtures must be submitted for approval minimum 2 weeks prior to project bid date.

C. All fixtures shall be baked-on enamel or powder-coated, unless otherwise specified in subsections below.

### 2.2 LAMPS AND BALLASTS/DRIVERS

A. LED Fixtures, Driver, and Characteristics

1. LED Fixture
   a. Cast aluminum heat sink integrated directly with housing.
   b. Replaceable PC board with quick connects.
   c. High lumen output LED's with 50,000 hours life expectancy.
   d. No lead or mercury.
2. Optics System
   a. Computer-optimized internal reflector with specular finish with diffusing lens to conceal the LED's for uniform luminance.
   b. Low glare, lumens as noted on drawings.
3. LED Driver
   a. Non-dimming and/or optical 0-10V dimming driver accommodating 120 or 277 volts AC at 60 Hz.
   b. Power factor 0.9 minimum.
   c. Driver to accept 120 or 277 volts AC.

### 2.3 POLES

A. Site lighting poles:

1. Round, straight, aluminum
2. Fabricated from high grade, structural materials.
3. Shaft supplied with hand hole and cover.

4. Base fabricated from structural quality, metals, circumferentially welded to shaft
5. Base cover shall be 2-piece (or similar), heavy wall construction and shall entirely conceal the anchor base.
6. Anchorage shall be by 3/4" fully galvanized anchor bolts, each supplied with (2) nuts and (2) washers. Anchor bolt lengths shall be as recommended by manufacturer, minimum 30". Refer to drawings for anchor bolt embedment into the concrete slab.

## PART 3 - EXECUTION

3.1 INSTALLATION

A. Install a lighting fixture for each lighting outlet indicated and mark new ballasts/drivers with day of installation.

B. Fixture voltage shall be as indicated on Drawings.

C. Install surface-mounted fixtures, with plaster frames compatible with column finish; secure fixtures mechanically to frames.

D. Align rows of surface-mounted fixtures to form straight lines at uniform elevations.

E. Surface mount fixtures shall be attached to structure. Toggle bolts are NOT permitted. Provide backing where required.

F. Poles shall be installed on concrete slab foundation as detailed on the drawings.

G. Poles shall be installed level and plumb.

3.2 TESTING

A. Check and adjust fixtures for required illumination.

B. Replace defective lamps and ballasts/drivers.

C. Test and adjust lighting control equipment for proper operation.

3.3 PROTECTION

A. Protect the Work of this section until Substantial Completion.

3.4 CLEANUP

A. Remove rubbish, debris, and waste materials from all areas of work each day.

B. Clean fixture surfaces of dirt, cement, plaster and debris. Furnish cleansers compatible with material surfaces being cleaned.

END OF SECTION

# Southern Earth Sciences, Inc

Operator: Brandon Green
Sounding: CPT-1
Cone Used: DDG1210
GPS Data: N30.37511 W89.05412

CPT Date/Time: 2/4/2020 11:14:28 AM
Location: COFFEE CREEK
Job Number: M20-018
Groundwater: Collapsed and dry at 1.5-ft.

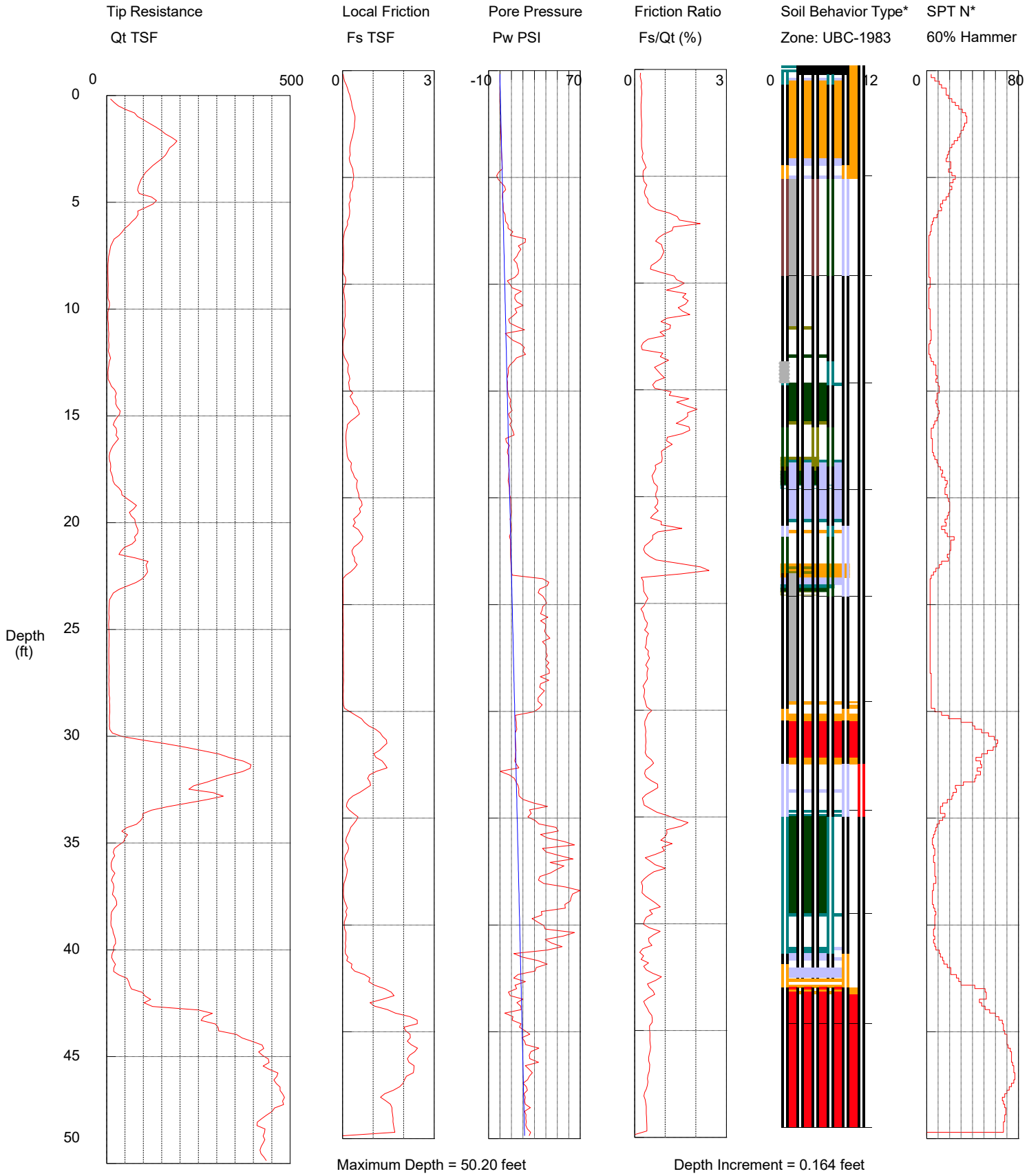


Maximum Depth = 50.20 feet

Depth Increment = 0.164 feet

1 sensitive fine grained
2 organic material
3 clay
4 silty clay to clay
5 clayey silt to silty clay
6 sandy silt to clayey silt
7 silty sand to sandy silt
8 sand to silty sand
9 sand
10 gravelly sand to sand
11 very stiff fine grained (*)
12 sand to clayey sand (*)

*Soil behavior type and SPT based on data from UBC-1983

# Southern Earth Sciences, Inc

Operator: Brandon Green
Sounding: CPT-2
Cone Used: DDG1210
GPS Data: N30.37483 W89.05404

CPT Date/Time: 2/4/2020 11:52:36 AM
Location: COFFEE CREEK
Job Number: M20-018
Groundwater: Collapsed and dry at 1.7-ft.

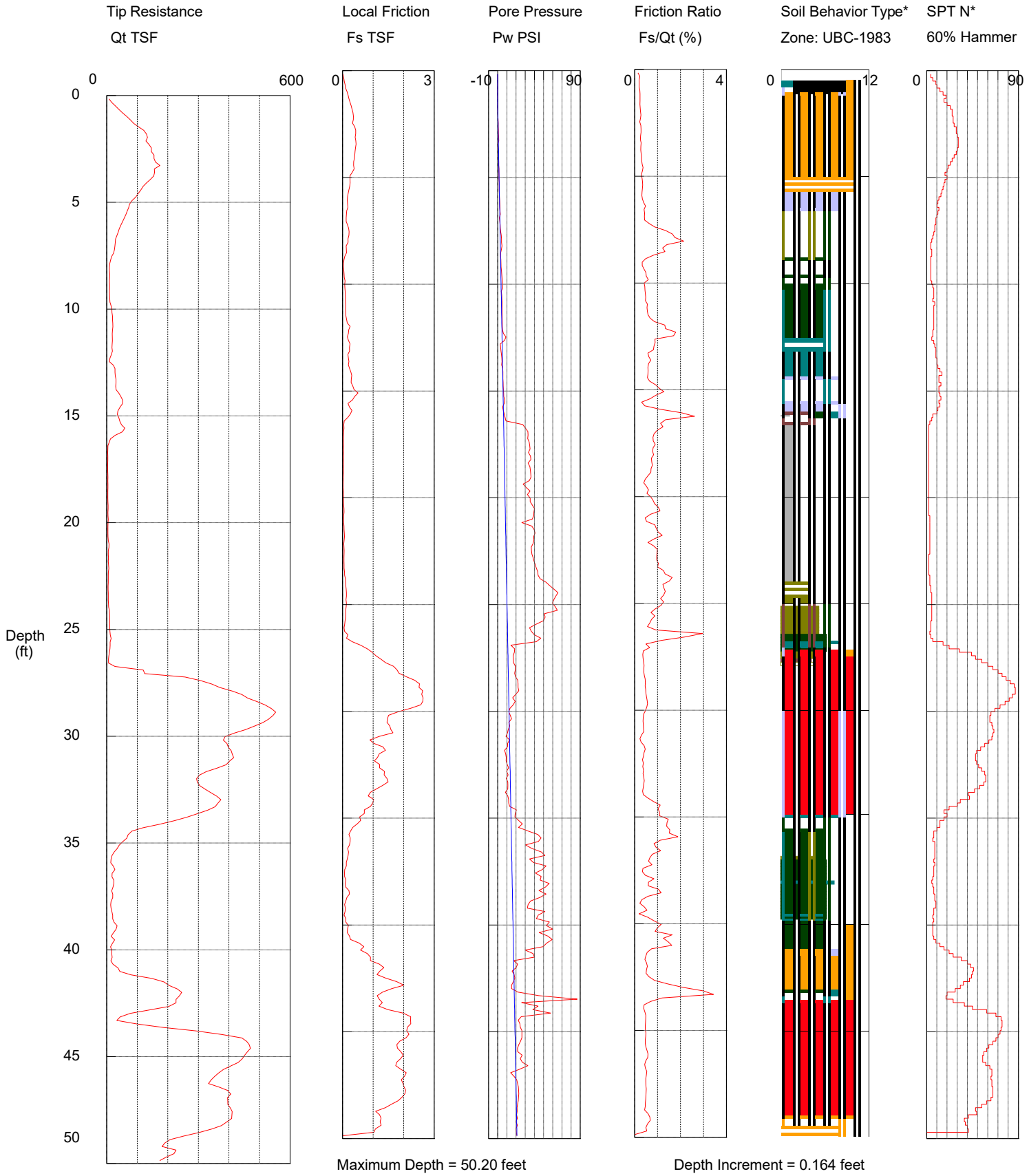


Maximum Depth = 50.20 feet

Depth Increment = 0.164 feet

1 sensitive fine grained
2 organic material
3 clay
4 silty clay to clay
5 clayey silt to silty clay
6 sandy silt to clayey silt
7 silty sand to sandy silt
8 sand to silty sand
9 sand
10 gravelly sand to sand
11 very stiff fine grained (*)
12 sand to clayey sand (*)

*Soil behavior type and SPT based on data from UBC-1983

# APPENDIX B

## FINAL RELEASE OF CLAIMS

## MISSISSIPPI DEPARTMENT OF MARINE RESOURCES

Project Name: **COFFEE CREEK OUTFALL REPLACEMENT**

WHEREAS, by the terms of the MDMR Standard Terms and Conditions stated in the section entitled Release Prior to Final Payment, entered into by the Mississippi Department of Marine Resources and the Contractor, _____, for the above-named Project, it is provided that after completion of all Work or settlement upon termination of the Contract, and prior to final payment, the Contractor will furnish the Mississippi Department of Marine Resources with a full and final release of all claims.

NOW, THEREFORE, in consideration of the above premises and upon the payment by the Mississippi Department of Marine Resources to the Contractor pursuant to the above referenced terms in the sum of $_____, the Contractor hereby remises, releases, and forever discharges the Mississippi Department of Marine Resources and its officers, agents, and employees; the Commission of Marine Resources and its Commissioners, and the State of Mississippi, of and from all manner of debts, liabilities, obligations, accounts, claims, and demands whatsoever, in law and equity, for any and all Work performed and materials provided by the Contractor on the above-named Project.

_____ _____

Authorized Signature Date

_____

Typed/Printed Name Title

## Project Bid Summary

1. BASE BID
   a. This bid shall include only the area of the culvert and pavilion.
2. ADD ALTERNATE #1
   a. This bid shall include only the improvements West of the culvert and pavilion.
3. ADD ALTERNATE #2
   a. This bid shall include only the improvements east of the culvert and pavilion.
4. ADD ALTERNATE #3
   a. This bid shall include only three (3) firepits.

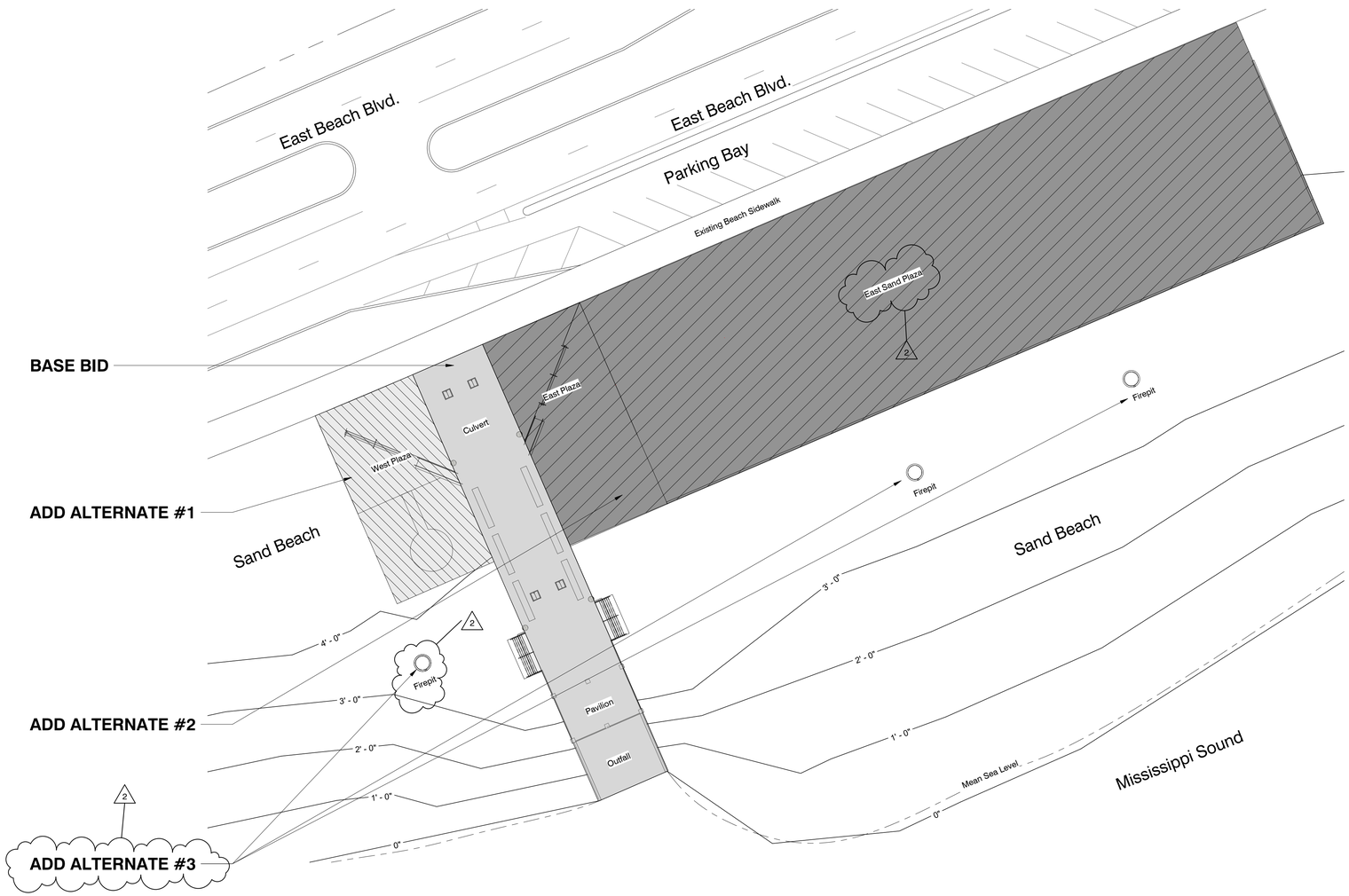


1 Project Bid Plan
1" = 30'-0"


COVINGTON
CIVIL AND ENVIRONMENTAL
2510 14TH STREET, SUITE 1010
GULFPORT, MISSISSIPPI 39501
Office: (228)396-0486


REGISTERED ARCHITECT
LEIGH GRIMES
STATE OF MISSISSIPPI

| NO. | DATE | REVISION/ISSUE |
|---|---|---|
| | | |

# COFFEE CREEK STORMWATER OUTFALL

North


DALE PARTNERS
Architecture
Interiors
Planning

One Jackson Place
Suite 250
188 East Capital Street
Jackson, MS 39201
p 601.352.5411

161 Lameuse Street
Suite 201
Biloxi, MS 39530
p 228.374.1409

dalepartners.com


Project Alternates

| | |
|---|---|
| DATE | 24 April, 2020 |
| SCALE | |
| DRAWN BY | AS |
| REVIEWED BY | LJ |
| PROJECT NO. | 19049 |
| SHEET NUMBER | G-201 |

1 Architectural Site Plan
1" = 20'-0"

COVINGTON
CIVIL AND ENVIRONMENTAL
2510 14TH STREET, SUITE 1010
GULFPORT, MISSISSIPPI 39501
Office: (228)396-0486

REGISTERED ARCHITECT
LEIGH GRIMES
STATE OF MISSISSIPPI

| NO. | DATE | REVISION/ISSUE |
|---|---|---|
| 2 | 06.10.20 | REVISION 02 |

# COFFEE CREEK STORMWATER OUTFALL

DALE PARTNERS
Architecture
Interiors
Planning

One Jackson Place
Suite 250
188 East Capital Street
Jackson, MS 39201
p 601.352.5411

161 Lameuse Street
Suite 201
Biloxi, MS 39530
p 228.374.1409

dalepartners.com

Architectural Site Plan

DATE: 24 April, 2020
SCALE:
DRAWN BY: AS
CHECKED BY: LJ
PROJECT NO.: 19049
SHEET NUMBER: AS-001

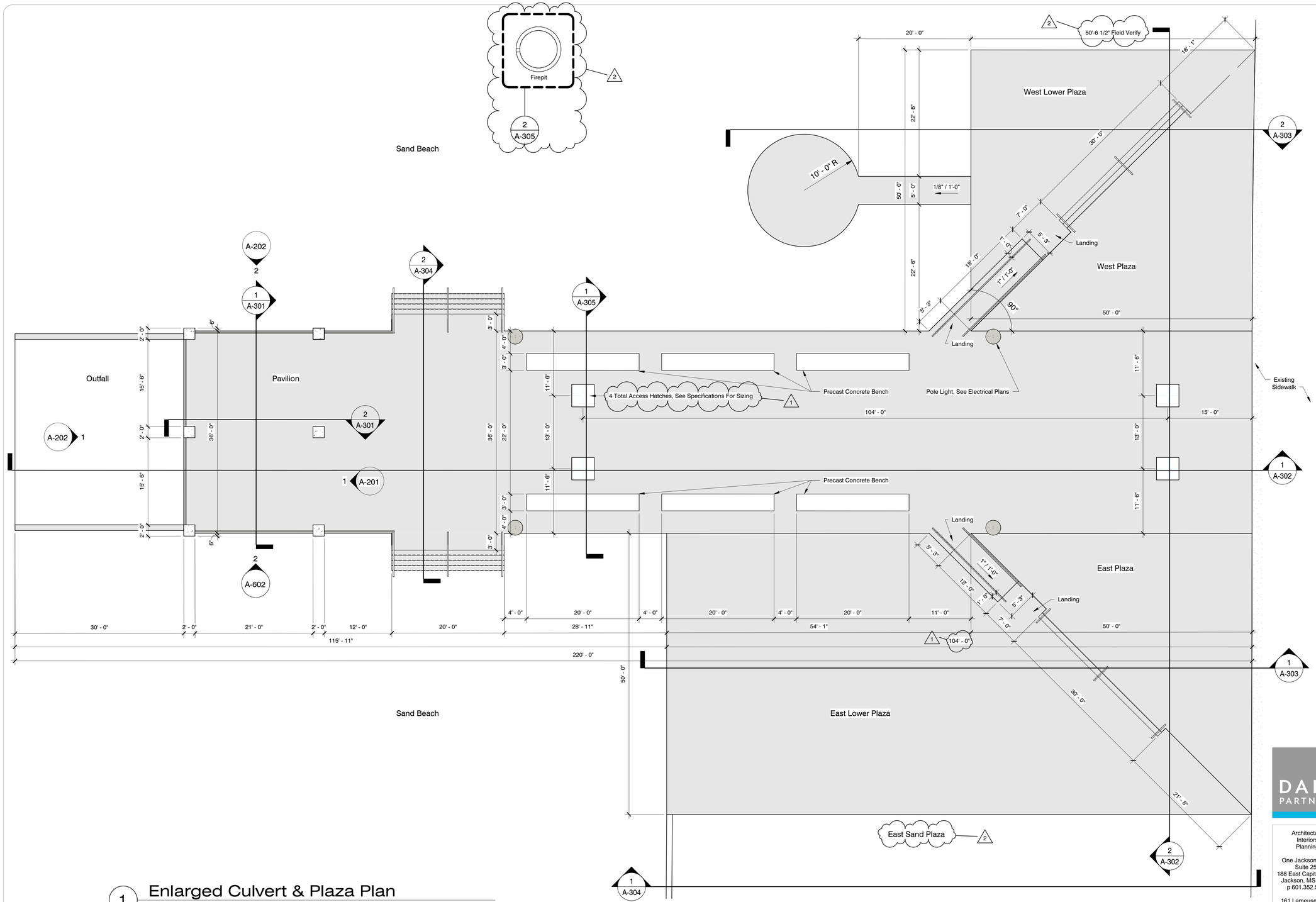


1 Enlarged Culvert & Plaza Plan
1/8" = 1'-0"


COVINGTON
CIVIL AND ENVIRONMENTAL
2510 14TH STREET, SUITE 1010
GULFPORT, MISSISSIPPI 39501
Office: (228)396-0486


REGISTERED ARCHITECT
LEIGH GRIMES
STATE OF MISSISSIPPI

| NO. | DATE | REVISION/ISSUE |
|---|---|---|
| 1 | 05.12.20 | REVISION 01 |
| 2 | 06.10.20 | REVISION 02 |

# COFFEE CREEK STORMWATER OUTFALL


DALE PARTNERS
Architecture
Interiors
Planning

One Jackson Place
Suite 250
188 East Capital Street
Jackson, MS 39201
p 601.352.5411

161 Lameuse Street
Suite 201
Biloxi, MS 39530
p 228.374.1409

dalepartners.com


Enlarged Culvert & Plaza Plan

| | |
|---|---|
| DATE | 24 April, 2020 |
| SCALE | |
| DRAWN BY | AS |
| CHECKED BY | LJ |
| PROJECT NO. | 19049 |
| SHEET NUMBER | A-001 |

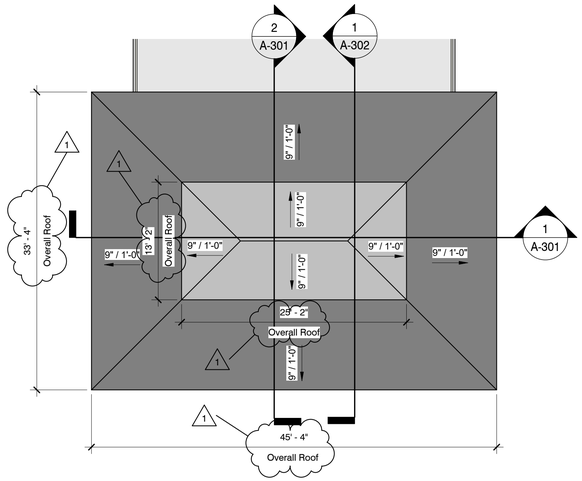


## 1 Composite Roof Plan

1/8" = 1'-0"

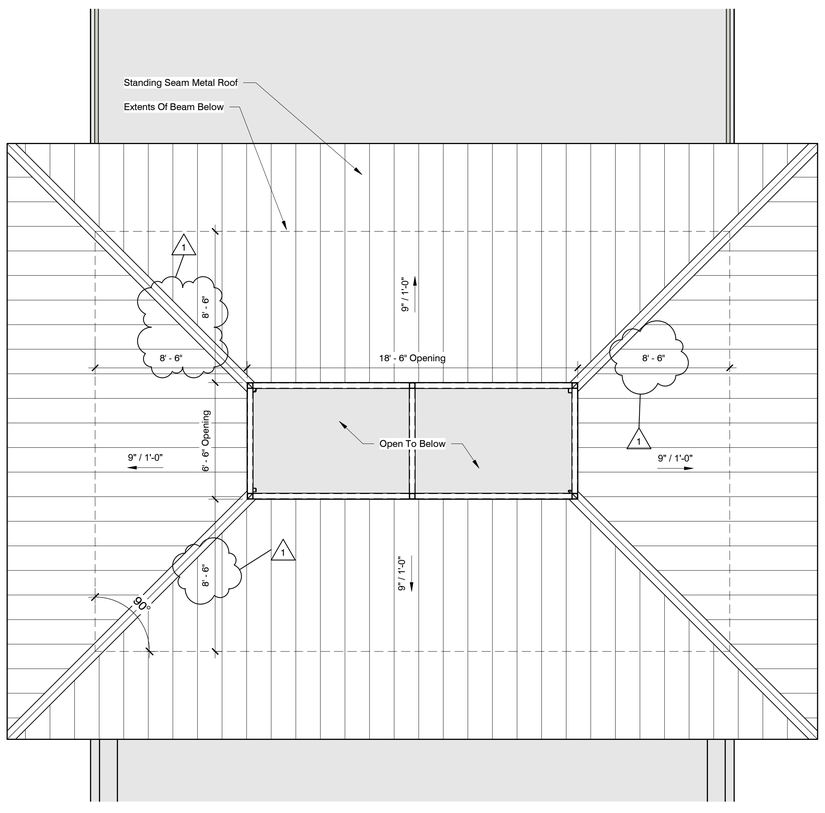


## 2 Lower Roof Plan

1/4" = 1'-0"

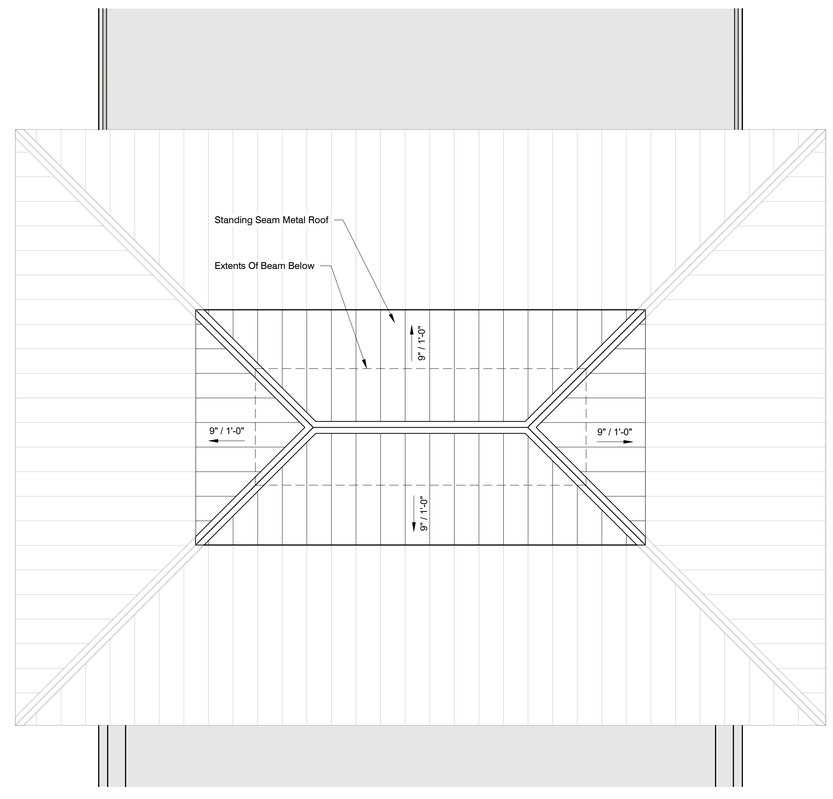


## 3 Upper Roof Plan

1/4" = 1'-0"

COVINGTON
CIVIL AND ENVIRONMENTAL
2510 14TH STREET, SUITE 1010
GULFPORT, MISSISSIPPI 39501
Office: (228)396-0486

REGISTERED ARCHITECT
LEIGH GRIMES
STATE OF MISSISSIPPI

| NO. | DATE | REVISION/ISSUE |
|---|---|---|
| 1 | 05.12.20 | REVISION 01 |

# COFFEE CREEK STORMWATER OUTFALL

DALE PARTNERS
Architecture
Interiors
Planning

One Jackson Place
Suite 250
188 East Capital Street
Jackson, MS 39201
p 601.352.5411

161 Lameuse Street
Suite 201
Biloxi, MS 39530
p 228.374.1409

dalepartners.com

Pavilion Roof Plan

DATE: 24 April, 2020
SCALE:
DRAWN BY: AS
CHECKED BY: LJ
PROJECT NO.: 19049
SHEET NUMBER: A-021

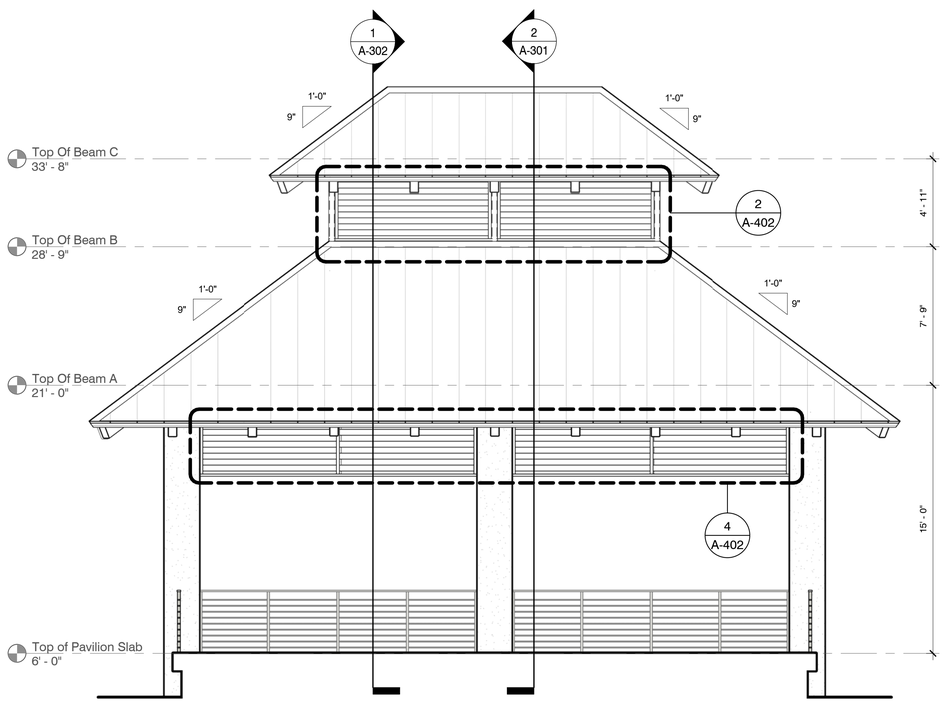


1 Pavilion North Elevation

1/4" = 1'-0"

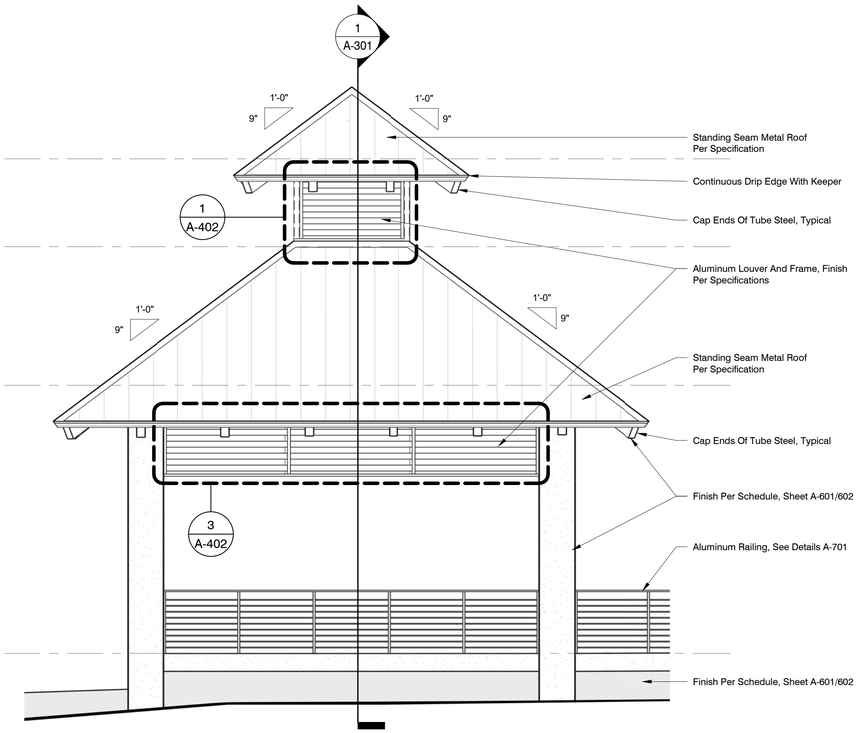


2 Pavilion East Elevation

1/4" = 1'-0"

COVINGTON
CIVIL AND ENVIRONMENTAL
2510 14TH STREET, SUITE 1010
GULFPORT, MISSISSIPPI 39501
Office: (228)396-0486

REGISTERED ARCHITECT
LEIGH GRIMES
STATE OF MISSISSIPPI

| NO. | DATE | REVISION/ISSUE |
|---|---|---|

# COFFEE CREEK STORMWATER OUTFALL

DALE PARTNERS
Architecture
Interiors
Planning

One Jackson Place
Suite 250
188 East Capital Street
Jackson, MS 39201
p 601.352.5411

161 Lameuse Street
Suite 201
Biloxi, MS 39530
p 228.374.1409

dalepartners.com

Pavilion Elevations

DATE: 24 April, 2020
SCALE:
DRAWN BY: AS
CHECKED BY: LJ
PROJECT NO.: 19049
SHEET NUMBER: A-201

## General Elevation Notes

A. Concrete form liner shall be used at all vertical plane surface under the plane of the culvert slab. See detail ??/A-601

B.

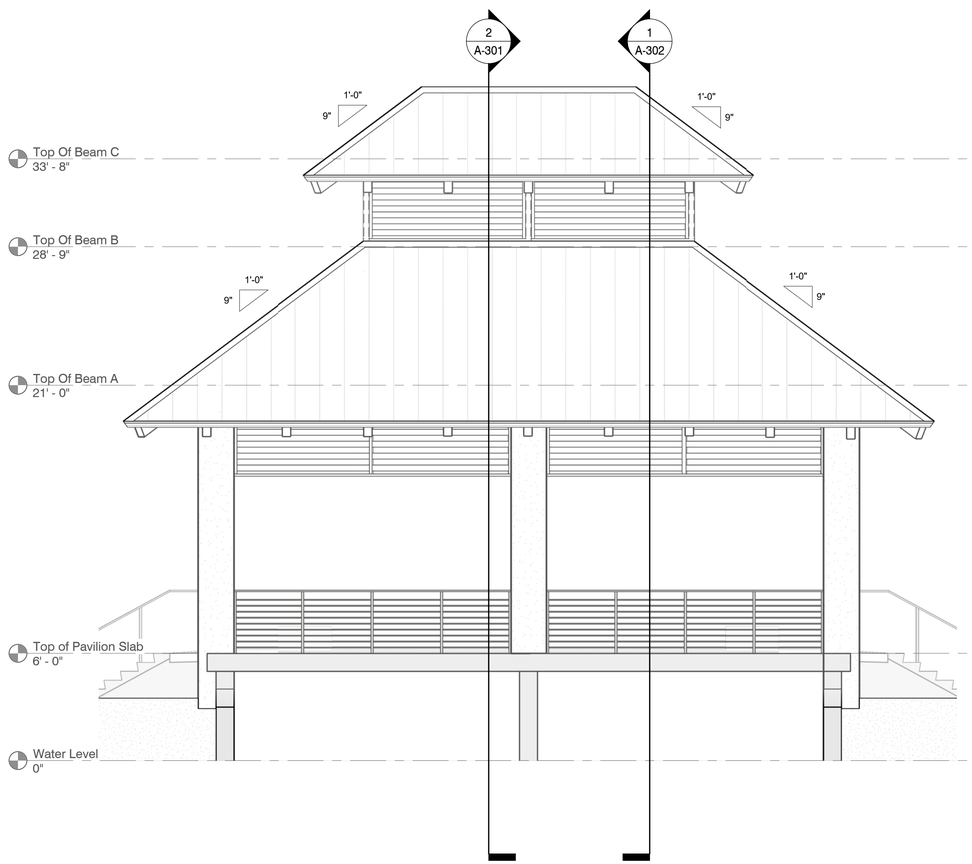


1 Pavilion South Elevation
1/4" = 1'-0"

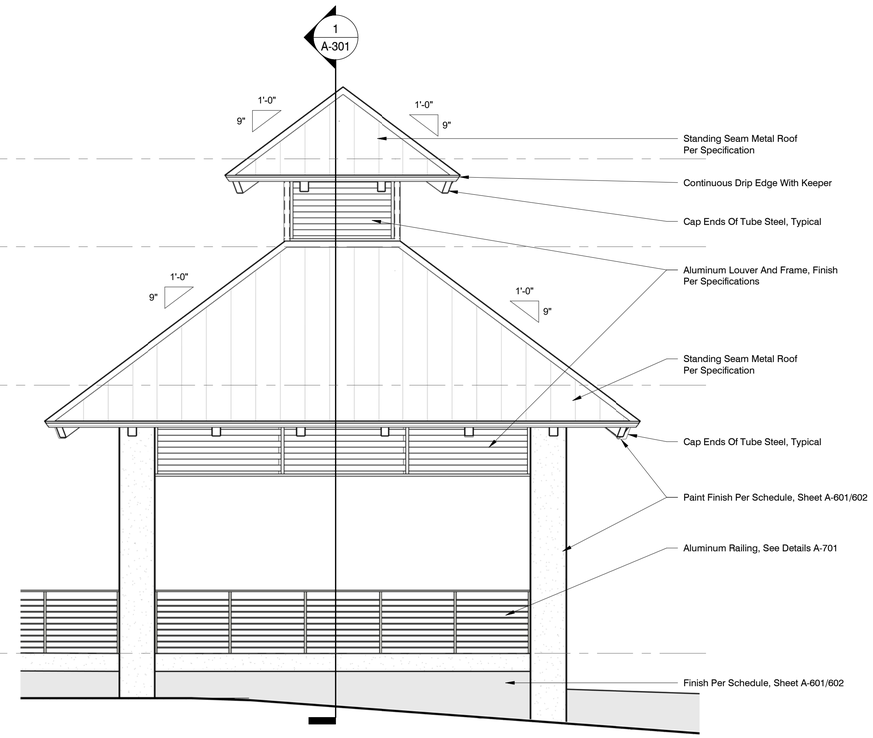


2 Pavilion West Elevation
1/4" = 1'-0"


COVINGTON
CIVIL AND ENVIRONMENTAL
2510 14TH STREET, SUITE 1010
GULFPORT, MISSISSIPPI 39501
Office: (228)396-0486


REGISTERED ARCHITECT
LEIGH GRIMES
STATE OF MISSISSIPPI

| NO. | DATE | REVISION/ISSUE |
|---|---|---|

# COFFEE CREEK STORMWATER OUTFALL


DALE PARTNERS
Architecture
Interiors
Planning

One Jackson Place
Suite 250
188 East Capital Street
Jackson, MS 39201
p 601.352.5411

161 Lameuse Street
Suite 201
Biloxi, MS 39530
p 228.374.1409

dalepartners.com


Pavilion Elevations

DATE: 24 April, 2020
SCALE:
DRAWN BY: AS
CHECKED BY: LJ
PROJECT NO.: 19049
SHEET NUMBER: A-202

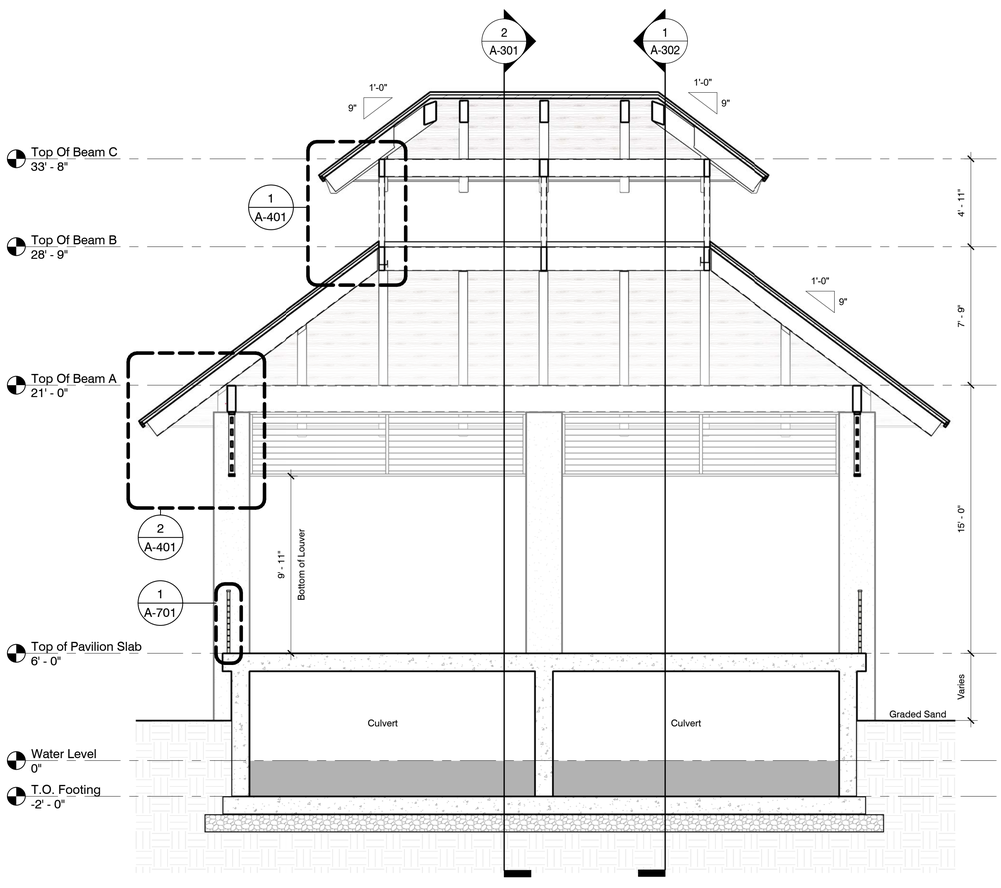


1 Pavilion Section 1
1/4" = 1'-0"

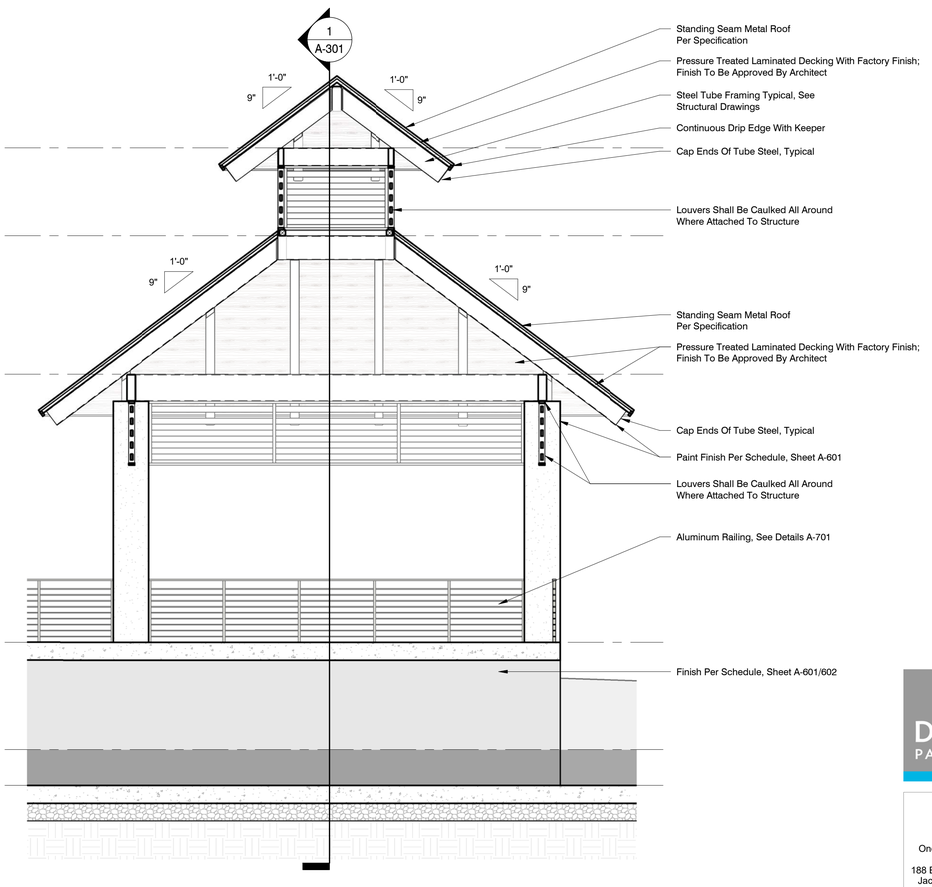


2 Pavilion Section 2
1/4" = 1'-0"

COVINGTON
CIVIL AND ENVIRONMENTAL
2510 14TH STREET, SUITE 1010
GULFPORT, MISSISSIPPI 39501
Office: (228)396-0486

REGISTERED ARCHITECT
LEIGH GRIMES
STATE OF MISSISSIPPI

| NO. | DATE | REVISION/ISSUE |
|---|---|---|

# COFFEE CREEK STORMWATER OUTFALL

DALE PARTNERS
Architecture
Interiors
Planning

One Jackson Place
Suite 250
188 East Capital Street
Jackson, MS 39201
p 601.352.5411

161 Lameuse Street
Suite 201
Biloxi, MS 39530
p 228.374.1409

dalepartners.com

Pavilion Sections

| | |
|---|---|
| DATE | 24 April, 2020 |
| SCALE | |
| DRAWN BY | AS |
| CHECKED BY | LJ |
| PROJECT NO. | 19049 |
| SHEET NUMBER | A-301 |

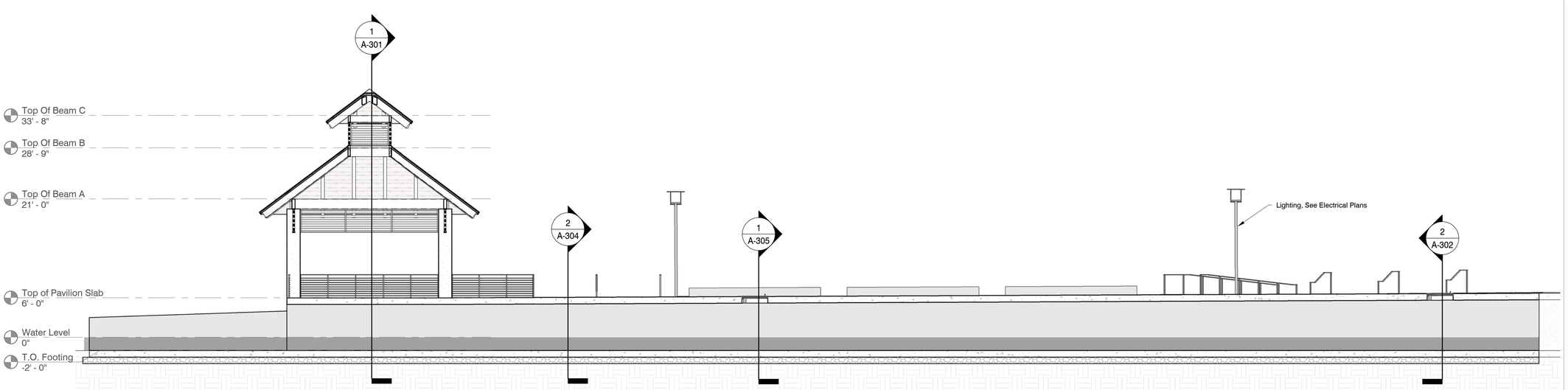


1 Longitudinal Culvert Section
1/8" = 1'-0"

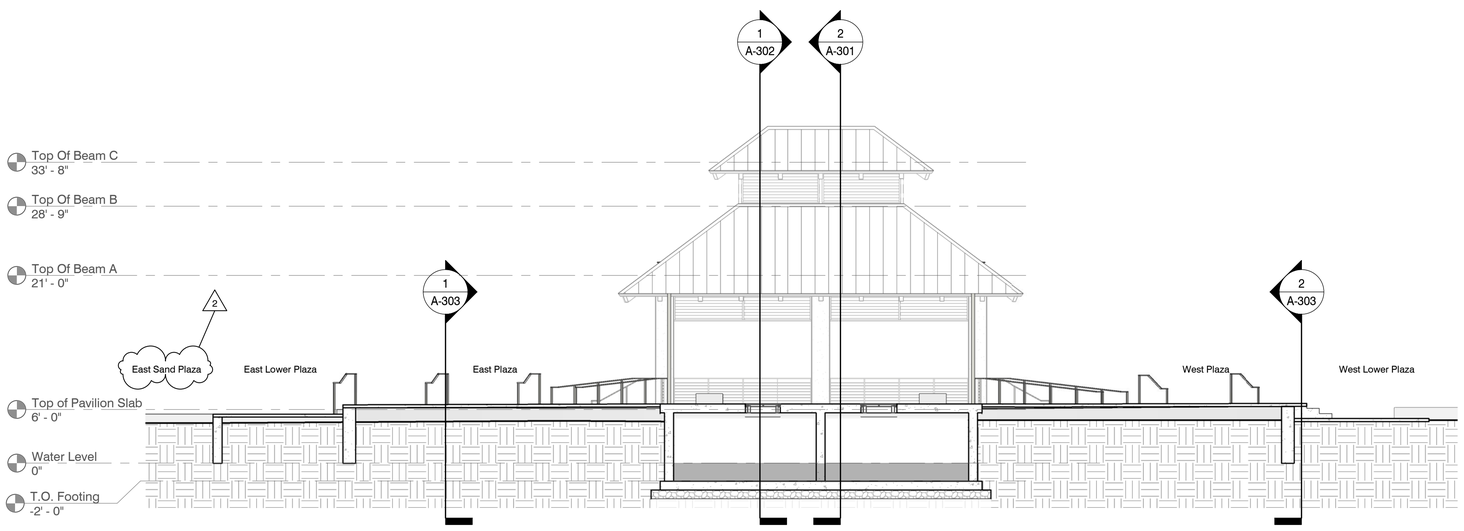


2 Culvert / Plaza Section
1/8" = 1'-0"

COVINGTON
CIVIL AND ENVIRONMENTAL
2510 14TH STREET, SUITE 1010
GULFPORT, MISSISSIPPI 39501
Office: (228)396-0486

REGISTERED ARCHITECT
LEIGH GRIMES
STATE OF MISSISSIPPI

| NO. | DATE | REVISION/ISSUE |
|---|---|---|

# COFFEE CREEK STORMWATER OUTFALL

DALE PARTNERS
Architecture
Interiors
Planning

One Jackson Place
Suite 250
188 East Capital Street
Jackson, MS 39201
p 601.352.5411

161 Lameuse Street
Suite 201
Biloxi, MS 39530
p 228.374.1409

dalepartners.com

Site Sections

| DATE | SHEET NUMBER |
|---|---|
| 24 April, 2020 | A-302 |
| SCALE | |
| DRAWN BY: AS / CHECKED BY: LJ | |
| PROJECT NO.: 19049 | |

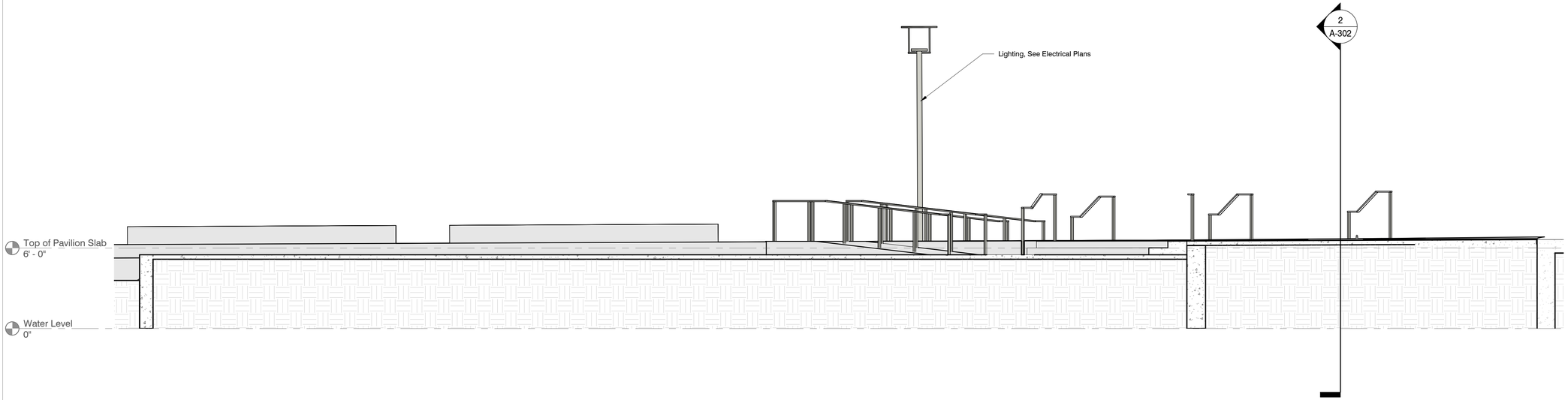


1 East Lower Plaza Section
1/4" = 1'-0"

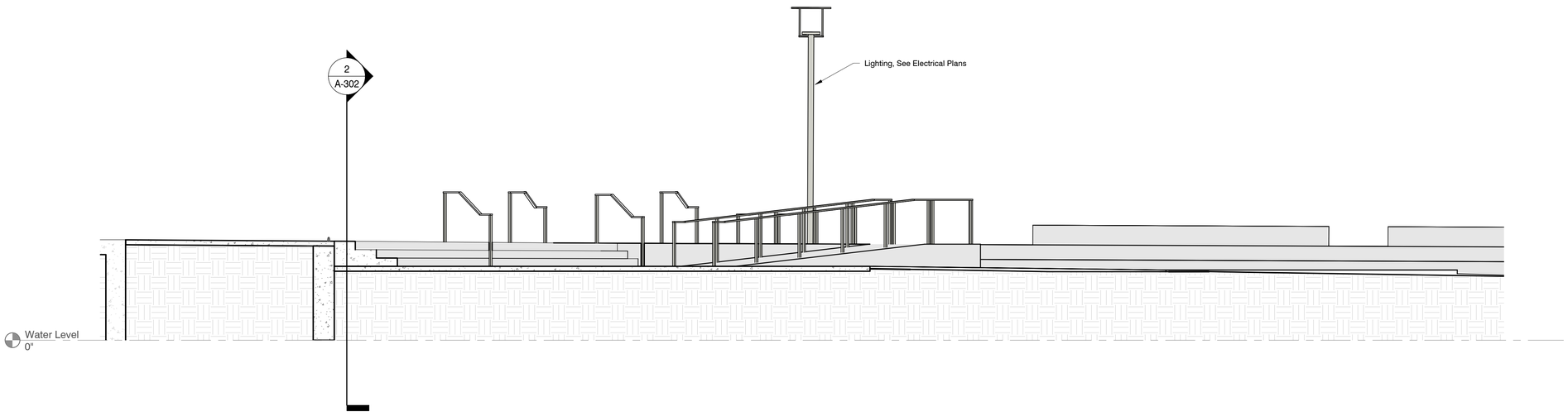


2 West Lower Plaza Section
1/4" = 1'-0"

COVINGTON
CIVIL AND ENVIRONMENTAL
2510 14TH STREET, SUITE 1010
GULFPORT, MISSISSIPPI 39501
Office: (228)396-0486

REGISTERED ARCHITECT
LEIGH GRIMES GARNER
3623
STATE OF MISSISSIPPI

| NO. | DATE | REVISION/ISSUE |
|---|---|---|

# COFFEE CREEK STORMWATER OUTFALL

DALE PARTNERS
Architecture
Interiors
Planning

One Jackson Place
Suite 250
188 East Capital Street
Jackson, MS 39201
p 601.352.5411

161 Lameuse Street
Suite 201
Biloxi, MS 39530
p 228.374.1409

dalepartners.com

Site Sections

DATE: 24 April, 2020
SCALE:
DRAWN BY: AS
CHECKED BY: LJ
PROJECT NO.: 19049
SHEET NUMBER: A-303

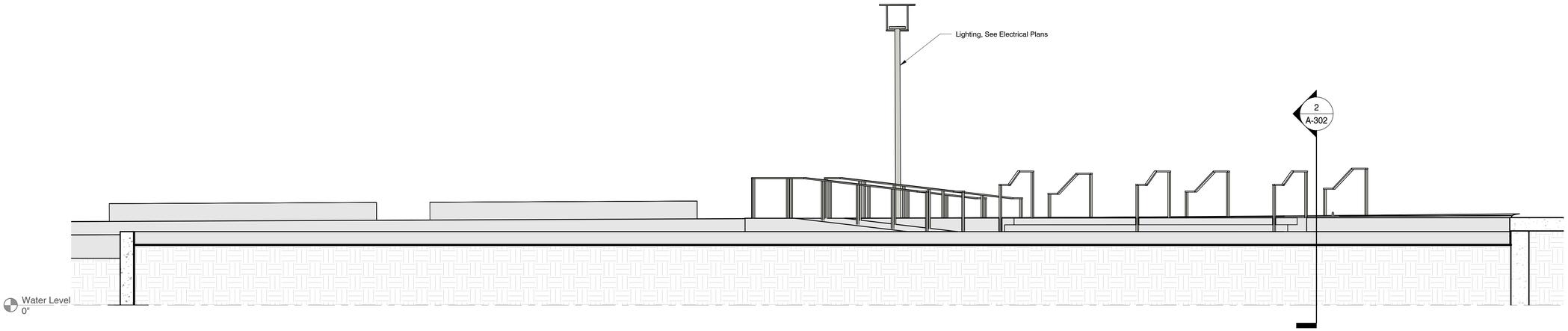


1 Volleyball Court Section
1/4" = 1'-0"

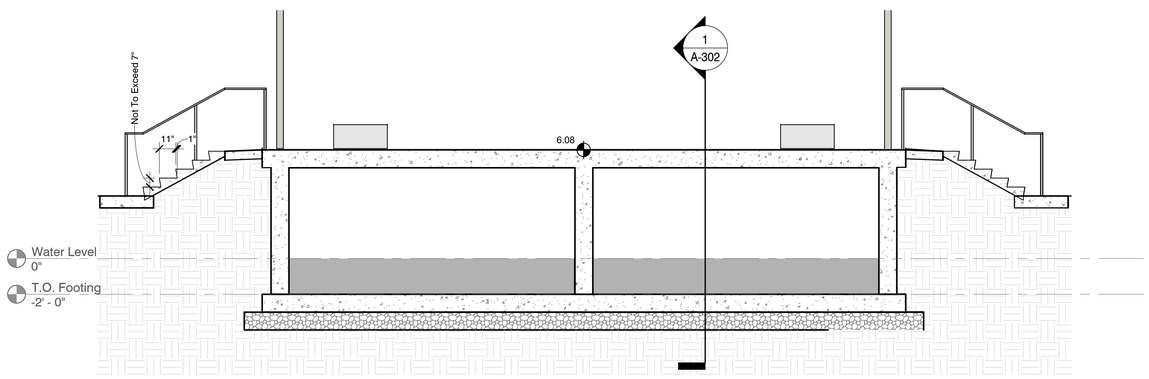


2 Culvert Stairs Section
1/4" = 1'-0"

COVINGTON
CIVIL AND ENVIRONMENTAL
2510 14TH STREET, SUITE 1010
GULFPORT, MISSISSIPPI 39501
Office: (228)396-0486

REGISTERED ARCHITECT
LEIGH GRIMES
STATE OF MISSISSIPPI

| NO. | DATE | REVISION/ISSUE |
|---|---|---|

# COFFEE CREEK STORMWATER OUTFALL

DALE PARTNERS
Architecture
Interiors
Planning

One Jackson Place
Suite 250
188 East Capital Street
Jackson, MS 39201
p 601.352.5411

161 Lameuse Street
Suite 201
Biloxi, MS 39530
p 228.374.1409

dalepartners.com

Site Sections

| | |
|---|---|
| DATE | 24 April, 2020 |
| SCALE | |
| DRAWN BY | AS |
| CHECKED BY | LJ |
| PROJECT NO. | 19049 |
| SHEET NUMBER | A-304 |

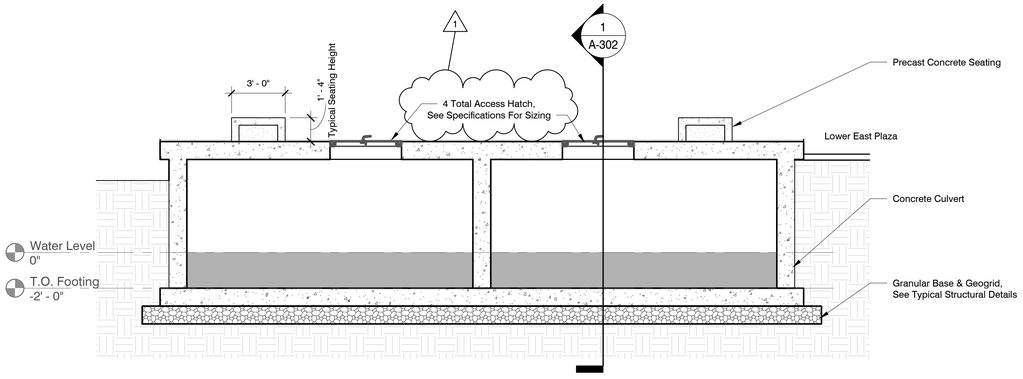


1 Culvert Seating & Access Hatch Section
1/4" = 1'-0"

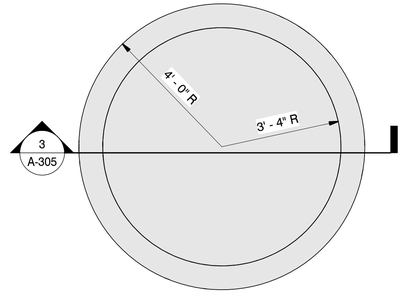


2 Typical Fire Pit Plan
1/2" = 1'-0"

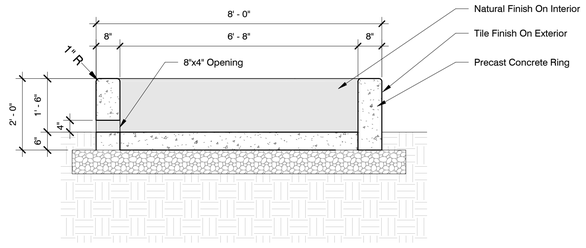


3 Typical Fire Pit Section
1/2" = 1'-0"

COVINGTON
CIVIL AND ENVIRONMENTAL
2510 14TH STREET, SUITE 1010
GULFPORT, MISSISSIPPI 39501
Office: (228)396-0486

REGISTERED ARCHITECT
LEIGH GRIMES
STATE OF MISSISSIPPI

| NO. | DATE | REVISION/ISSUE |
|---|---|---|
| 1 | 05.12.20 | REVISION 01 |

# COFFEE CREEK STORMWATER OUTFALL

DALE PARTNERS
Architecture
Interiors
Planning
One Jackson Place
Suite 250
188 East Capital Street
Jackson, MS 39201
p 601.352.5411
161 Lameuse Street
Suite 201
Biloxi, MS 39530
p 228.374.1409
dalepartners.com

Site Sections

DATE 24 April, 2020
SCALE
DRAWN BY AS
ENGINEER BY LJ
PROJECT NO. 19049
SHEET NUMBER A-305

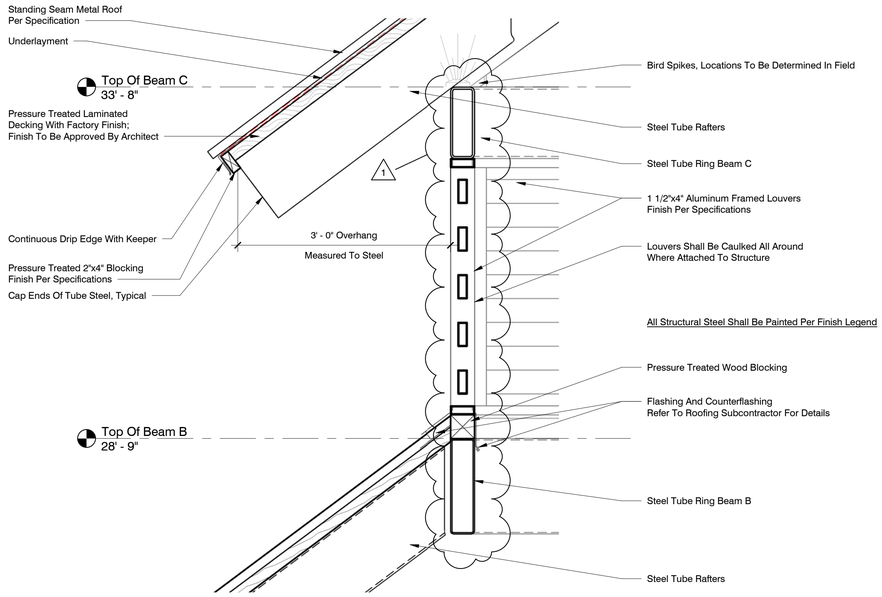


## 1 Pavilion Upper Roof Wall Section

1" = 1'-0"

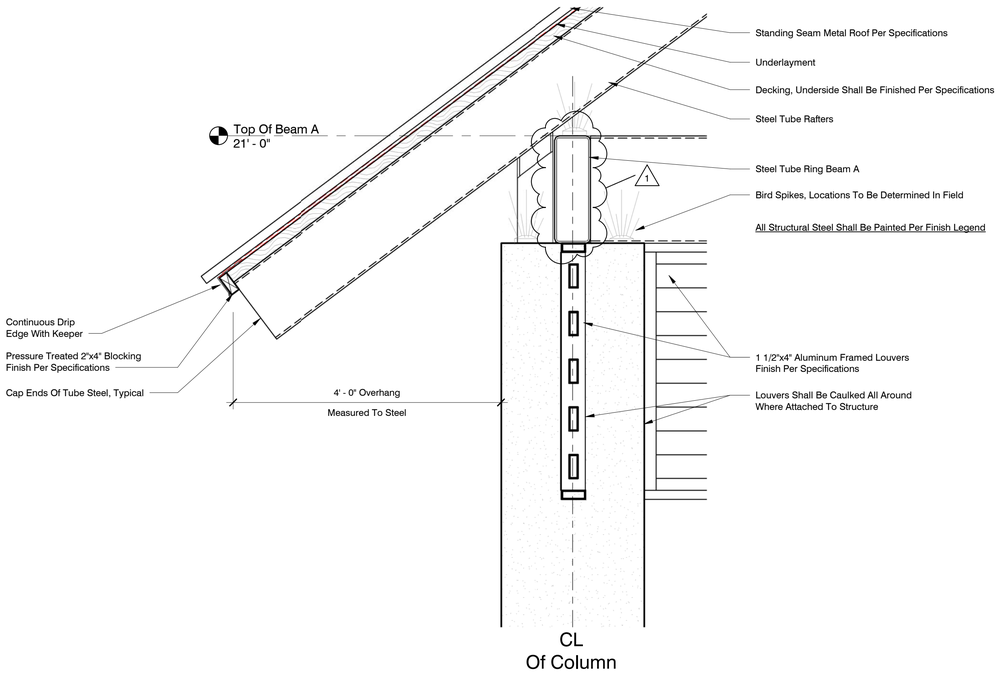


## 2 Pavilion Lower Roof Wall Section

1" = 1'-0"

COVINGTON
CIVIL AND ENVIRONMENTAL
2510 14TH STREET, SUITE 1010
GULFPORT, MISSISSIPPI 39501
Office: (228)396-0486

REGISTERED ARCHITECT
LEIGH GRIMES
STATE OF MISSISSIPPI

| NO. | DATE | REVISION/ISSUE |
|---|---|---|
| 1 | 05.12.20 | REVISION 01 |

# COFFEE CREEK STORMWATER OUTFALL

DALE PARTNERS
Architecture
Interiors
Planning

One Jackson Place
Suite 250
188 East Capital Street
Jackson, MS 39201
p 601.352.5411

161 Lameuse Street
Suite 201
Biloxi, MS 39530
p 228.374.1409

dalepartners.com

Pavilion Details

DATE: 24 April, 2020
SCALE:
DRAWN BY: AS
CHECKED BY: LJ
PROJECT NO.: 19049
SHEET NUMBER: A-401

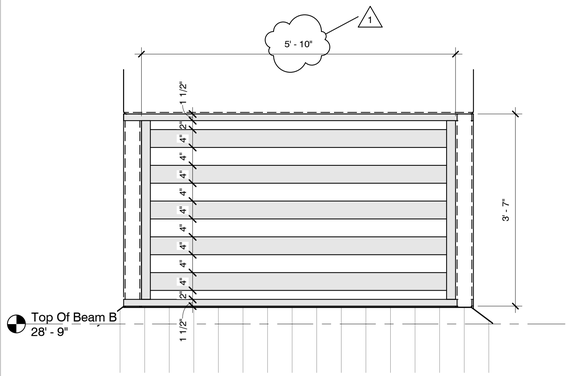


1 East & West Upper Louver Detail
3/4" = 1'-0"

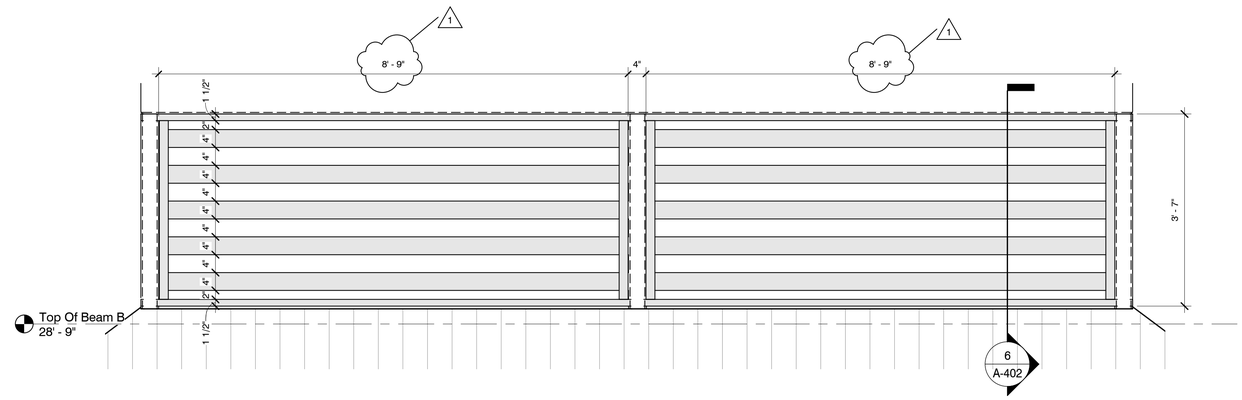


2 North & South Upper Louver Detail
3/4" = 1'-0"

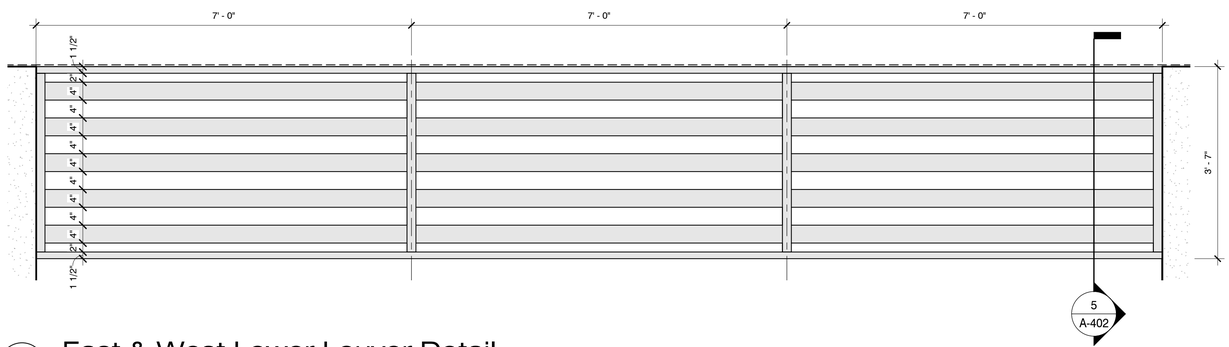


3 East & West Lower Louver Detail
3/4" = 1'-0"

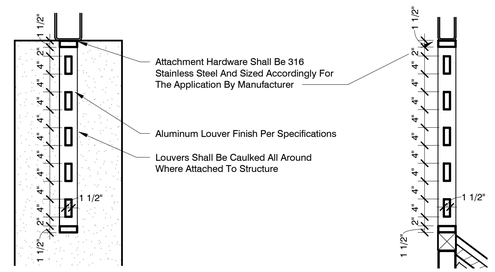


5 Lower Louver Section
3/4" = 1'-0"

6 Upper Louver Section
3/4" = 1'-0"

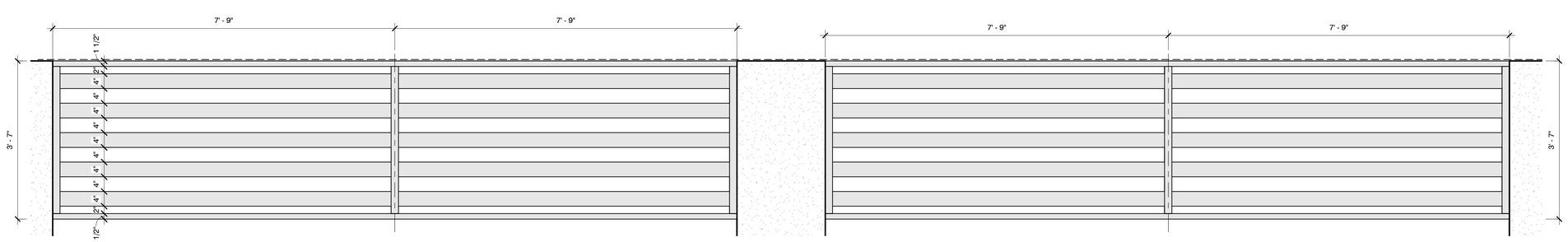


4 North & South Lower Louver Detail
3/4" = 1'-0"


COVINGTON
CIVIL AND ENVIRONMENTAL
2510 14TH STREET, SUITE 1010
GULFPORT, MISSISSIPPI 39501
Office: (228)396-0486


REGISTERED ARCHITECT
LEIGH GRIMES
STATE OF MISSISSIPPI

| NO. | DATE | REVISION/ISSUE |
|---|---|---|
| 1 | 05.12.20 | REVISION 01 |

# COFFEE CREEK STORMWATER OUTFALL


DALE PARTNERS
Architecture
Interiors
Planning

One Jackson Place
Suite 250
188 East Capital Street
Jackson, MS 39201
p 601.352.5411

161 Lameuse Street
Suite 201
Biloxi, MS 39530
p 228.374.1409

dalepartners.com


Pavilion Louver Details

DATE: 24 April, 2020
SCALE:
DRAWN BY: AS
CHECKED BY: LJ
PROJECT NO.: 19049
SHEET NUMBER: A-402

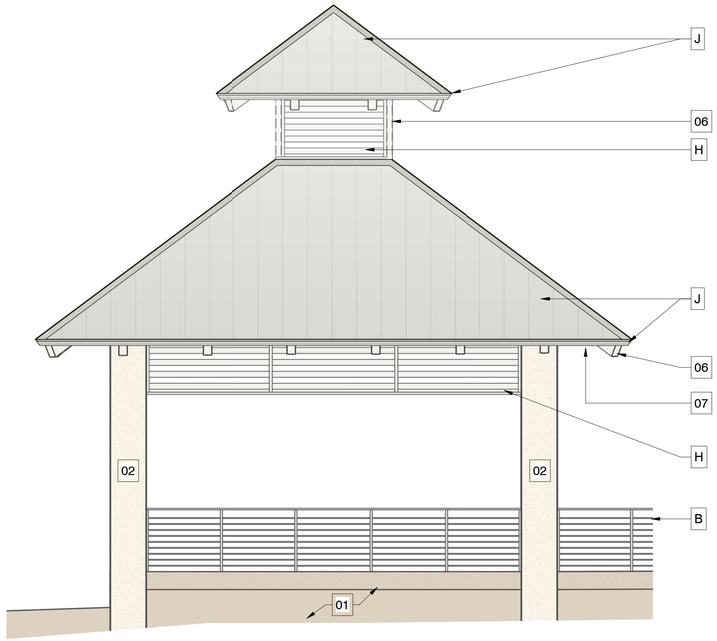


1 Pavilion Finish Scheme 1

1/4" = 1'-0"

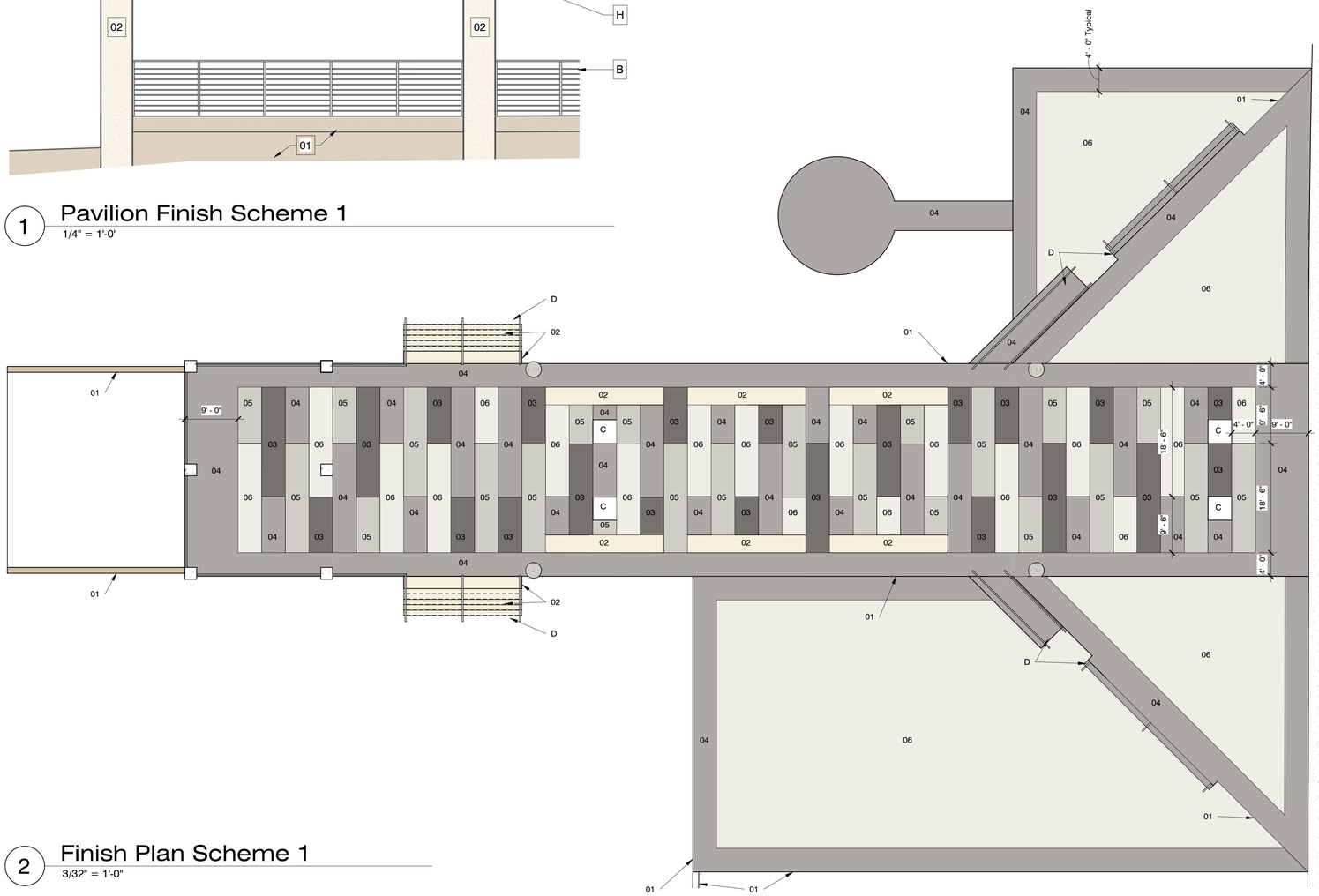


2 Finish Plan Scheme 1

3/32" = 1'-0"

## Finish Schedule ##

**Paint**

01: Sherwin William, SW 6156 Ramie
02: Sherwin William, SW 7105 Paperwhite
03: Sherwin William, SW 7019 Gauntlet Gray
04: Sherwin William, SW 6003 Proper Gray
05: Sherwin William, SW 7654 Lattice
06: Sherwin William, SW 7005 Pure White

**Stain**

07: Factory Finish Stain Shall Match Benjamin Moore, ES-10 Natural

**Tile for firepit exterior** 2

08: Daltile, Keystones, Color - Galaxy D023, Straight Joint 1"x1" Mosaic, Finish - Matte

## Finish Notes

A. All pavilion structural steel shall be painted SW 7005 Pure White.
B. All aluminum railing shall be manufacturer finished clear anodized.
C. Floor access hatch does not receive paint.
D. Provide a medium broom texture finish on ramps and stair treads perpendicular to path of travel.
E. U.N.O. all concrete floor finishes shall be a light broom finish.
F. Tile at fire pits shall be only on exterior face.
G. Not used
H. All aluminum louvers shall be anodized to match Paint 06, Sherwin William SW 7005 Pure White. Caulking at joints shall match louvers.
I. Not Used.
J. Finish Per Specifications.
K. Underside of pressure treated laminated decking shall have factory finish. Finish to be approved by Architect.
L. Precast concrete fire pit exterior shall receive Tile 08.
M. Where paint meets sand, paint finish shall extend to footing.

## Color Palette

SW 6156
**Ramie**
Interior / Exterior
Location Number: 210-C2
01

SW 7105
**Paperwhite**
Interior / Exterior
Location Number: 262-C1
02

SW 7019
**Gauntlet Gray**
Interior / Exterior
Location Number: 244-C6
03

SW 6003
**Proper Gray**
Interior / Exterior
Location Number: 240-C3
04

SW 7654
**Lattice**
Interior / Exterior
Location Number: 239-C2
05

SW 7005
**Pure White**
Interior / Exterior
Location Number: 255-C1
06

Exterior Stain
Benjamin Moore
**Natural ES-10**
07


COVINGTON
CIVIL AND ENVIRONMENTAL
2510 14TH STREET, SUITE 1010
GULFPORT, MISSISSIPPI 39501
Office: (228)396-0486


REGISTERED ARCHITECT
LEIGH GRIMES
STATE OF MISSISSIPPI

| NO. | DATE | REVISION/ISSUE |
|---|---|---|

# COFFEE CREEK STORMWATER OUTFALL


DALE PARTNERS
Architecture
Interiors
Planning

One Jackson Place
Suite 250
188 East Capital Street
Jackson, MS 39201
p 601.352.5411

161 Lameuse Street
Suite 201
Biloxi, MS 39530
p 228.374.1409

dalepartners.com


Finish Plan

DATE: 24 April, 2020
SCALE:
DRAWN BY: AS
CHECKED BY: LJ
PROJECT NO.: 19049
SHEET NUMBER: A-601

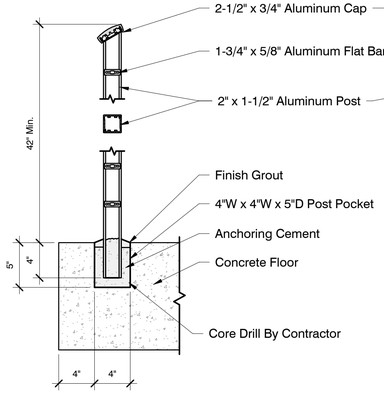


## 1 Guardrail Section

1 1/2" = 1'-0"

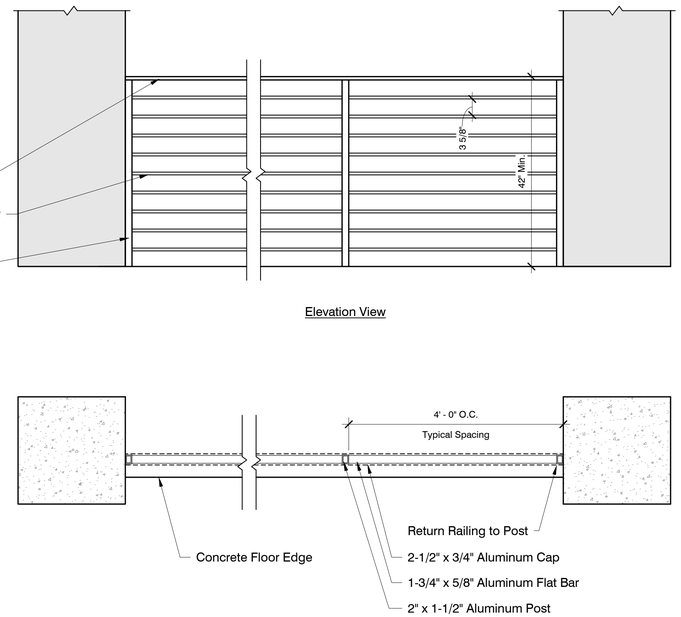


## 2 Railing Elevation & Plan

3/4" = 1'-0"

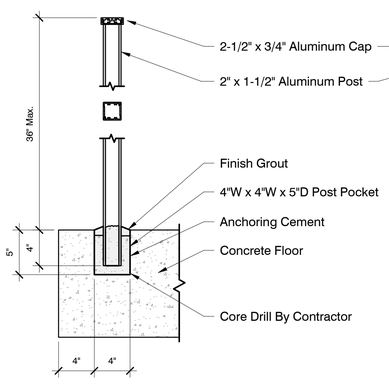


## 3 Handrail Section

1 1/2" = 1'-0"

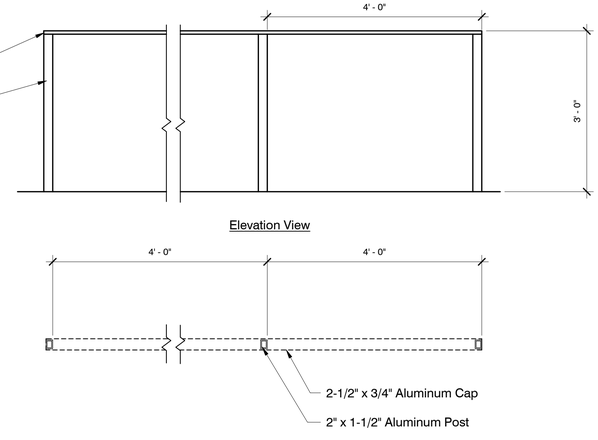


## 4 Hand Rail Elevation & Plan

3/4" = 1'-0"

## General Guardrail Notes

1. Guardrail height measured from finished surface shall be 42" minimum.
2. Handrail height measured from finished surface shall be 36" maximum.
3. Clear space between a guardrail and a wall or other surface shall be a minimum of 1 1/2 inches and maximum of 3 1/2" inches.
4. Rail finish shall be Clear Anodized.


COVINGTON
CIVIL AND ENVIRONMENTAL
2510 14TH STREET, SUITE 1010
GULFPORT, MISSISSIPPI 39501
Office: (228)396-0486


REGISTERED ARCHITECT
LEIGH GRIMES
STATE OF MISSISSIPPI

| NO. | DATE | REVISION/ISSUE |
|---|---|---|
| | | |

# COFFEE CREEK STORMWATER OUTFALL


DALE PARTNERS
Architecture
Interiors
Planning

One Jackson Place
Suite 250
188 East Capital Street
Jackson, MS 39201
p 601.352.5411

161 Lameuse Street
Suite 201
Biloxi, MS 39530
p 228.374.1409

dalepartners.com


Stair & Railing Details

| | |
|---|---|
| DATE | 24 April, 2020 |
| SCALE | |
| DRAWN BY | AS |
| CHECKED BY | LJ |
| PROJECT NO. | 19049 |
| SHEET NUMBER | A-701 |

## GENERAL:

1. ALL DRAWINGS (ARCHITECTURAL, STRUCTURAL, CIVIL, PLUMBING, MECHANICAL, ELECTRICAL, ETC.) AND THE SPECIFICATIONS ARE COMPLIMENTARY AND MUST BE USED IN COMBINATION WITH EACH OTHER TO OBTAIN COMPLETE CONSTRUCTION INFORMATION.
2. NO STRUCTURAL MEMBER SHALL BE CUT, DRILLED OR BURNED UNLESS PREVIOUSLY APPROVED BY THE ENGINEER OF RECORD. CONTRACTOR SHALL NOT CUT OR PATCH STRUCTURAL WORK IN A MANNER THAT WOULD RESULT IN A REDUCTION OF THE LOAD CARRYING CAPACITY OR THE LOAD/DEFLECTION RATIO.
3. STRUCTURAL DESIGN IS BASED ON DIMENSIONS SHOWN ON STRUCTURAL PLANS. IF ANY DIMENSIONAL DISCREPANCIES ARE FOUND BETWEEN STRUCTURAL PLANS AND PLANS OF OTHER DISCIPLINES, CONTRACTOR SHALL NOTIFY THE STRUCTURAL ENGINEER OF RECORD FOR RESOLUTION.
4. THE STRUCTURAL NOTES DEFINE GENERAL DESIGN AND MATERIAL REQUIREMENTS AND ARE INTENDED TO SUPPLEMENT, BUT NOT REPLACE THE PROJECT SPECIFICATIONS.
5. THE GENERAL CONTRACTOR SHALL SUBMIT DATA SHEETS OF ROOFTOP AND/OR EQUIPMENT PURCHASED TO THE ENGINEER OF RECORD FOR VERIFICATION OF LOADS USED IN THE DESIGN AT LEAST TWO WEEKS PRIOR TO FABRICATION OF THE SUPPORTING STRUCTURE.

## DESIGN CRITERIA:

1. CODES AND STANDARDS:
   - A. INTERNATIONAL BUILDING CODE 2018 EDITION.
   - B. AISC MANUAL OF STEEL CONSTRUCTION.
   - C. AWS LATEST EDITION.
   - D. ACI 318-14 BUILDING CODE REQUIREMENTS FOR STRUCTURAL CONCRETE
2. LOADING (LOAD FACTORS NOT INCLUDED):
   - A. GRAVITY LOADS
     - 1. ROOF LOADS
       - A. DEAD LOAD = 20 PSF
       - B. LIVE LOAD = 20 PSF
       - C. COLLATERAL LOAD = 5 PSF
       - D. GROUND SNOW LOAD = 5 PSF
   - B. LATERAL LOADS
     - 1. WIND PER IBC
       - A. BASIC WIND SPEED ---------- = 150 MPH
       - B. RISK CATEGORY ---------- = I
       - C. IMPORTANCE FACTOR ---------- = 1.0
       - D. WIND EXPOSURE ---------- = C
       - E. INTERNAL PRESSURE COEFFICIENTS = ± 0.00 (OPEN)
       - F. COMPONENTS AND CLADDING PRESSURE =

**WIND PRESSURE**

| LOCATION | ZONE | P1(-) (psf) |
|---|---|---|
| ROOF | 1 | -46.58 |
| | 2e | -46.58 |
| | 2n | -87.86 |
| | 2r | -46.58 |
| | 3 | -143.01 |

a = 3.3'

2. SEISMIC PER IBC

| | | |
|---|---|---|
| Ss | = | 0.094 |
| S1 | = | 0.058 |
| SITE CLASS | = | D |
| SDS | = | 0.10 |
| SD1 | = | 0.093 |
| IMPORTANCE FACTOR | = | 1.0 |
| SEISMIC DESIGN CATEGORY | = | B |
| BASIC SEISMIC FORCE RESISTING SYSTEM | = | ORDINARY STEEL MOMENT FRAME |
| DESIGN BASE SHEAR | V = | 11.5 KIPS |
| SEISMIC RESPONSE COEFFICIENT | Cs = | 0.286 |
| RESPONSE MODIFICATION FACTOR | R = | 3.5 |
| ANALYSIS PROCEDURE | = | SIMPLIFIED |

3. DESIGN CONCEPT: (PAVILION)
   RIGID CONCRETE COLUMNS ANCHORED INTO C.I.P. CONCRETE BOX CULVERT SUPPORT WELDED RIGID TUBE STEEL ROOF FRAMING OVERLAID WITH 3" T & G WOOD DECK.

## FOUNDATION NOTES:

1. SEE ALSO DIVISION 2 OF SPECIFICATIONS.
2. THE FOUNDATION DESIGN IS BASED ON SUBSURFACE EXPLORATION BY SOUTHERN EARTH SCIENCES AND REPORT SOUNDINGS DATED FEBRUARY 4, 2020.
3. THE ALLOWABLE SOIL BEARING PRESSURE IS 1500 PSF (ASSUMED).
4. STRIP ALL TOPSOIL, VEGETATION, DEBRIS, ROOTS AND DELETERIOUS MATERIAL FROM UNDER BOX CULVERT AND WITHIN 5 FEET OUTSIDE BUILDING PAD.
5. EXPOSED SURFACES SHALL BE LEVELED AND THE TOP 12 INCHES SHALL BE COMPACTED TO 95% OF THE STANDARD PROCTOR MAXIMUM DRY DENSITY (ASTM D-698). ANY SOFT OR YIELDING SOILS IDENTIFIED SHALL BE REMOVED AND REPLACED WITH ENGINEERED FILL COMPACTED TO 95% OF THE STANDARD PROCTOR MAXIMUM DRY DENSITY (ASTM D-698). SOILS REMOVED SHALL BE WASTED OR STOCKPILED FOR USE IN NON-STRUCTURAL AREAS.
6. ADD GEOGRID, FILTER CLOTH AND CRUSHED STONE AS INDICATED TO BOTTOM OF SLAB UNDER BOX CULVERT COMPACT TO 95%, ASTM D-1557.
7. EXCAVATE FOR FOOTING AND COMPACT TRENCH BOTTOMS TO 95% MODIFIED PROCTOR DENSITY, ASTM D-1557.
8. DRAINAGE COURSE SHALL BE SANDY GRANULAR FREE DRAINING MATERIAL WITH 10% TO 15% PASSING A NO. 200 SIEVE.

## CONCRETE NOTES:

1. SEE ALSO DIVISION 3 OF SPECIFICATIONS.
2. ALL WORK SHALL CONFORM TO THE LATEST REQUIREMENTS OF ACI 318, CRSI AND THE INTERNATIONAL BUILDING CODE.
3. ALL CONCRETE SHALL OBTAIN A 28 DAY STRENGTH AS SPECIFIED.
   - A. COLUMNS = 4000 PSI (SEE SPECS.)
   - B. CONCRETE BOX CULVERT = 4000 PSI (SEE SPECS.)
   - C. ALL OTHER WORK = 3500 PSI (SEE SPECS.)
4. SUBMIT MIX DESIGN TO THE A/E FOR APPROVAL. THIS SUBMITTAL SHALL CONFORM TO SECTION 5.3 OF ACI 318-14 AND SECTION 1905 OF THE INTERNATIONAL BUILDING CODE. MIX DESIGN WILL NOT BE APPROVED WITHOUT BREAK DATA AS REQUIRED BY ACI.
5. REINFORCING STEEL SHALL CONFORM TO ASTM A615, GRADE 60.
6. CHAMFER ALL EXPOSED EXTERNAL CORNERS OF CONCRETE WITH 45 DEGREE CHAMFER.
7. CONTRACTOR TO REFER TO MECHANICAL PIPING DRAWINGS FOR EMBEDDED ITEMS NOT SHOWN.
8. PROVIDE SLAB JOINTS IN BOX CULVERT AS INDICATED ON PLANS. CONTRACTOR TO SUBMIT JOINT PATTERN PLAN FOR APPROVAL. TYPICAL PANEL DIMENSIONS SHALL BE BETWEEN 10 AND 25 FEET. CORNERS SHALL HAVE A MINIMUM ANGLE OF 90 DEGREES.
9. ALL MIX DESIGNS TO INCLUDE CORROSION INHIBITOR PER SPECIFICATIONS.
10. FINISHES:
    SEE SPECIFICATIONS

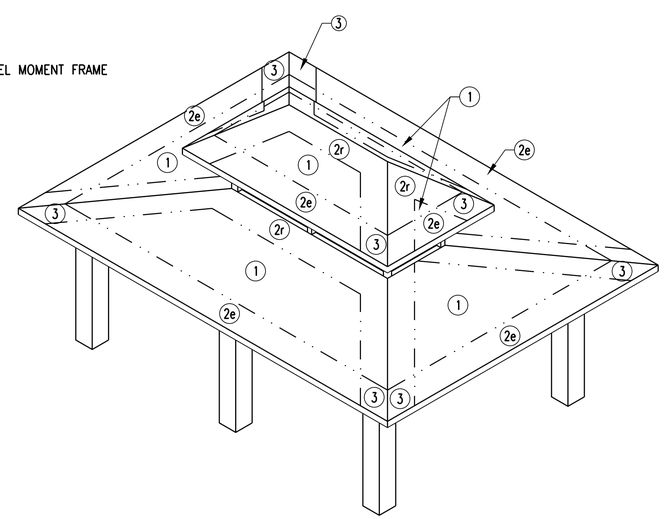


## COMPONENTS AND CLADDING DIAGRAM

SCALE: N.T.S.

## REINFORCING STEEL NOTES:

1. REINFORCING BARS SHALL CONFORM TO ASTM A615, MARKED S, AND A616, MARKED R, GRADE 60. BARS REQUIRING A TIGHT BENDING RADIUS (TIES AND STIRRUPS) AND BARS TO BE WELDED SHALL CONFORM TO ASTM A706, LATEST REVISION.
2. CMU OR CLAY BRICK SHALL NOT BE USED TO SUPPORT SLAB REINFORCEMENT. SUPPORT SLAB REINFORCEMENT ON STEEL CHAIRS WITH SAND PLATES OR APPROVED SUPPORTS.
3. 4000 PSI CONCRETE BLOCKS MAY BE USED TO SUPPORT REINFORCEMENT IN SPREAD FOOTINGS AND STRIP FOOTINGS. CMU OR CLAY BRICKS SHALL NOT BE USED.
4. ALL DETAILING, FABRICATION AND ERECTION OF REINFORCING STEEL SHALL CONFORM TO THE A.C.I. MANUAL OF STANDARD PRACTICE FOR DETAILING REINFORCED CONCRETE STRUCTURES, A.C.I. 315.
5. CONCRETE PROTECTION FOR REINFORCEMENT: A.C.I. 318 OR AS INDICATED.
6. ALL BAR SPLICES SHALL BE 40d LAP SPLICES, UNLESS OTHERWISE SHOWN.
7. SPLICE TOP BARS AT CENTER OF SPAN AND BOTTOM BARS AT THE SUPPORT.
8. UNLESS OTHERWISE NOTED, ALL REINFORCING SPLICES SHALL BE IN CONFORMANCE WITH A.C.I. 318, LATEST REVISION.
9. ALL REINFORCEMENT BAR BENDS AND HOOKS SHALL BE IN CONFORMANCE WITH A.C.I. 315, LATEST REVISION UNLESS OTHERWISE NOTED.

## WOOD ROOF DECK:

1. ROOF DECK SHALL BE 3 INCH (NOMINAL) THICK, EXTERIOR GRADE WOOD STRUCTURAL PER AITC 112.
2. PROVIDE ANCHORAGE OF WOOD DECK TO STEEL AS INDICATED.
3. ALL TEK SCREWS ARE TO BE 316 STAINLESS STEEL SCREWS.

## STEEL:

1. SEE ALSO DIVISION 5 OF SPECIFICATIONS.
2. ALL STEEL WORK SHALL BE PERFORMED ACCORDING TO THE A.I.S.C. SPECIFICATIONS FOR THE DESIGN, FABRICATION, AND ERECTION OF STRUCTURAL STEEL FOR BUILDINGS. ALL WELDING SHALL CONFORM TO A.W.S.D.1.1.
3. MATERIAL:
   - A. ALL WIDE FLANGE SHAPES SHALL CONFORM TO ASTM A992, Fy=50 KSI.
   - B. ALL PLATES, SHAPES (EXCEPT W-SHAPES) AND BARS SHALL CONFORM TO ASTM A572, GRADE 50, Fy=50 KSI.
   - C. ALL STRUCTURAL TUBING SHALL CONFORM TO ASTM A500, GRADE B, Fy=46 KSI.
   - D. ALL STRUCTURAL PIPE SHALL CONFORM TO ASTM A53, GRADE B, Fy=35KSI.
   - E. ALL ANCHOR BOLTS SHALL CONFORM TO ASTM F1554, GRADE 36, Fy=36KSI.
   - F. ALL STRUCTURAL FASTENERS SHALL BE 3/4"ø A325 HIGH STRENGTH BOLTS (HSB).
   - G. HEADED STUDS: STEEL; Fs = 60,000 PSI.
4. THE CONTRACTOR SHALL PROVIDE TEMPORARY BRACING AS NEEDED FOR ERECTION UNTIL ALL STRUCTURAL ELEMENTS ARE INSTALLED.
5. CONNECTIONS NOT SHOWN ON THE DRAWINGS SHALL BE DESIGNED BY THE FABRICATOR AS DOUBLE ANGLE SIMPLE SHEAR CONNECTIONS PER AISC. THE CONNECTIONS SHALL DEVELOP 1/2 THE TOTAL UNIFORM LOAD CAPACITY OF BEAM. THE CONNECTION LENGTH SHALL NOT BE LESS THAN 1/2 THE "T" DISTANCE OF THE BEAM (2 BOLT MINIMUM).
6. BEAM TO COLUMN CONNECTIONS SHALL BE DESIGNED BY THE FABRICATOR AS MOMENT RESISTING CONNECTIONS. SHEAR CAPACITY SHALL BE PER NOTE 5 ABOVE. THE MOMENT CAPACITY SHALL BE THAT OF THE LARGEST BEAM IN CONNECTION FRAMING.
7. ALL SHAPES, CONNECTIONS AND FASTENERS SHALL BE HOT DIPPED GALVANIZED AFTER FABRICATION. ALL H.D. GALVANIZING SHALL BE REPAIRED WITH 2 COATS OF FIELD APPLIED GALVANIZED PAINT (ASTM A-780) 3 MILS MINIMUM PER COAT. CONTRACTOR TO MAXIMIZE SHOP WELDING IN ALL CONNECTIONS TO AVOID FIELD WELDING. MILL CERTIFICATION REQUIRED ON ALL HOT DIPPED GALVANIZING.


SIMPKINS & COSTELLI, INC.
Consulting Engineers
Structural – Civil
P.O. Box 6235
401 32½ Street
Gulfport, MS 39506
Phone: 228-864-6289
Fax: 228-864-2897
www.simpkins-costelli.com
S & C Job Number 1832.1


## LEGEND:

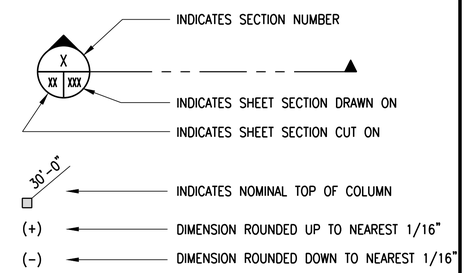


## ABBREVIATIONS:

| | |
|---|---|
| A.F.F. | ABOVE FINISH FLOOR |
| L | ANGLE |
| B.F.F. | BELOW FINISH FLOOR |
| B.O.S. | BOTTOM OF STEEL |
| C.J. | CONSTRUCTION JOINT |
| CONT. | CONTINUOUS |
| D.B.A. | DEFORMED BAR ANCHOR |
| E.F. | EACH FACE |
| E.W. | EACH WAY |
| E.O.F. | EDGE OF FOUNDATION |
| E.J. | EXPANSION JOINT |
| O.C. | ON CENTER |
| S.J. | SAWN JOINT |
| T-1 | TRUSS |
| T.O.C. | TOP OF CONCRETE |
| T.O.F. | TOP OF FOOTING |
| T.O.J. | TOP OF JOIST |
| T.O.S. | TOP OF STEEL |
| T.O.W. | TOP OF WALL |
| U.N.O. | UNLESS NOTED OTHERWISE |


COVINGTON
CIVIL AND ENVIRONMENTAL
2510 14TH STREET, SUITE 1010
GULFPORT, MISSISSIPPI 39501
Office: (228)396-0486


MICHAEL R. COSTELLI, REGISTERED PROFESSIONAL ENGINEER, NO. 6653, STATE OF MISSISSIPPI
4/24/20

| NO. | DATE | REVISION/ISSUE |
|---|---|---|
| | | |

COFFEE CREEK
STORM WATER OUTFALL

DESIGN CRITERIA, NOTES AND LEGEND

| | |
|---|---|
| DATE 04-24-2020 | SHEET NUMBER S1.0 |
| SCALE AS NOTED | |
| DRAWN BY RSS / CHECKED BY MRC | |
| PROJECT NO. 19049 | |


G:\Drawings\2018\1832.1 Sand Beach Drainage Project Phase II - Coffee Creek\Structural\1832.1 Coffee Creek Outfall Structural.dwg, S1.0, 6/11/2020 3:09:59 PM, AutoCAD PDF (General Documentation).pc3

SIMPKINS & COSTELLI, INC.
Consulting Engineers
Structural – Civil
P.O. Box 6235
401 32½ Street
Gulfport, MS 39506
Phone: 228-864-6289
Fax: 228-864-2897
www.simpkins-costelli.com
S & C Job Number 1832.1

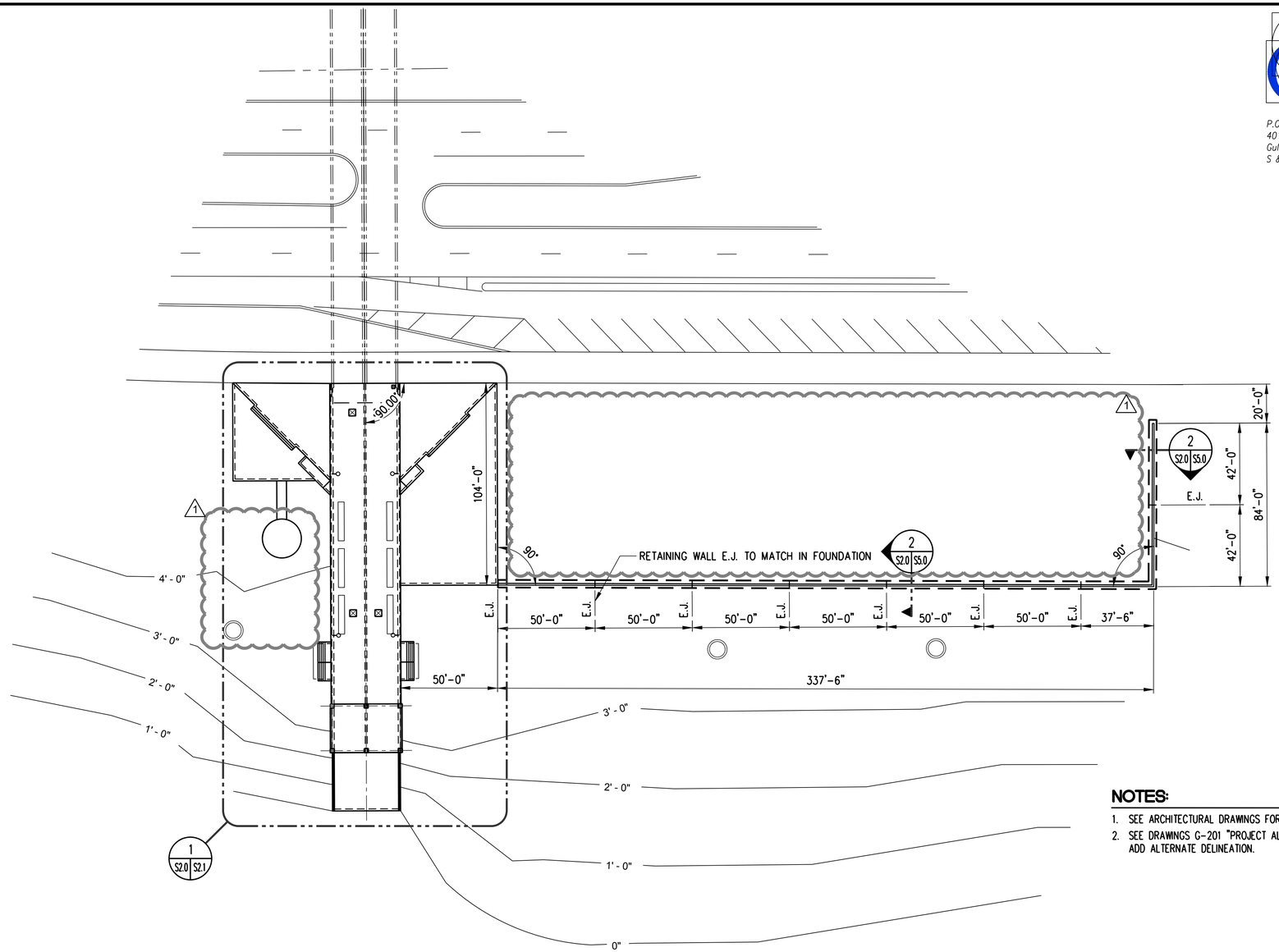


## NOTES:

1. SEE ARCHITECTURAL DRAWINGS FOR SPOT ELEVATIONS AND SLOPES.
2. SEE DRAWINGS G-201 "PROJECT ALTERNATES" FOR BASE BID AND ADD ALTERNATE DELINEATION.

## FOUNDATION PLAN

SCALE: 1/32" = 1'-0"

NORTH

COVINGTON
CIVIL AND ENVIRONMENTAL
2510 14TH STREET, SUITE 1010
GULFPORT, MISSISSIPPI 39501
Office: (228)396-0486

MICHAEL R. COSTELLI
REGISTERED PROFESSIONAL ENGINEER
NO. 6653
STATE OF MISSISSIPPI
4/24/20

| NO. | DATE | REVISION/ISSUE |
|---|---|---|
| 1 | 06.11.20 | REVISION 01 |

# COFFEE CREEK STORM WATER OUTFALL

FOUNDATION PLAN

| | |
|---|---|
| DATE 04-24-2020 | SHEET NUMBER S2.0 |
| SCALE AS NOTED | |
| DRAWN BY RSS / REVIEWED BY MRC | |
| PROJECT NO. 19049 | |

G:\Drawings\2018\1832.1 Sand Beach Drainage Project Phase II - Coffee Creek\Structural\1832.1 Coffee Creek Outfall Structural.dwg, S2.0, 6/11/2020 3:10:00 PM, AutoCAD PDF (General Documentation).pc3

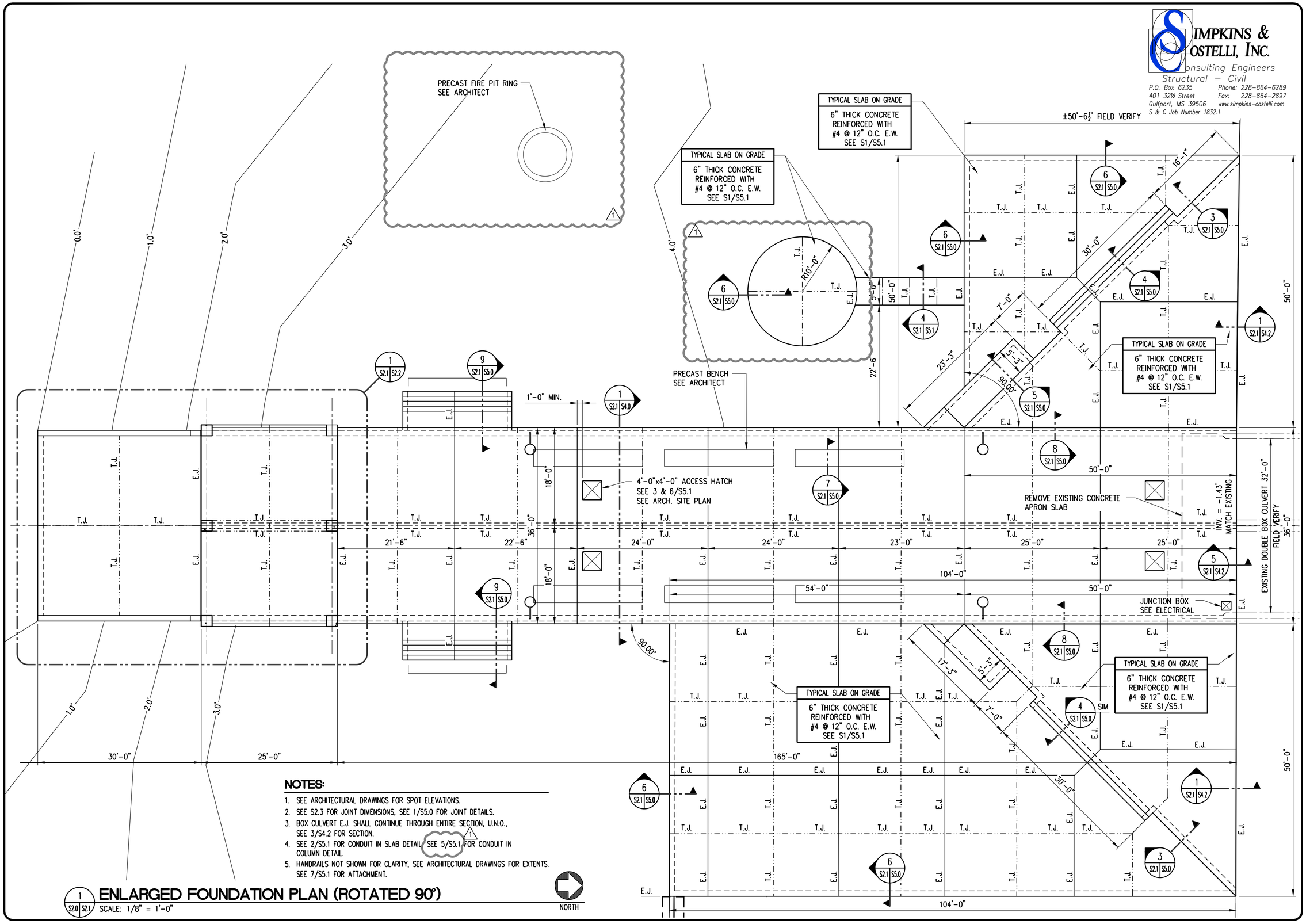


## NOTES:

1. SEE ARCHITECTURAL DRAWINGS FOR SPOT ELEVATIONS.
2. SEE S2.3 FOR JOINT DIMENSIONS, SEE 1/S5.0 FOR JOINT DETAILS.
3. BOX CULVERT E.J. SHALL CONTINUE THROUGH ENTIRE SECTION, U.N.O., SEE 3/S4.2 FOR SECTION.
4. SEE 2/S5.1 FOR CONDUIT IN SLAB DETAIL, SEE 5/S5.1 FOR CONDUIT IN COLUMN DETAIL.
5. HANDRAILS NOT SHOWN FOR CLARITY, SEE ARCHITECTURAL DRAWINGS FOR EXTENTS. SEE 7/S5.1 FOR ATTACHMENT.

1 S2.0 S2.1 **ENLARGED FOUNDATION PLAN (ROTATED 90°)**

SCALE: 1/8" = 1'-0"

NORTH


SIMPKINS & COSTELLI, INC.
Consulting Engineers
Structural – Civil
P.O. Box 6235
401 32½ Street
Gulfport, MS 39506
Phone: 228-864-6289
Fax: 228-864-2897
www.simpkins-costelli.com
S & C Job Number 1832.1

COVINGTON
CIVIL AND ENVIRONMENTAL
2510 14TH STREET, SUITE 1010
GULFPORT, MISSISSIPPI 39501
Office: (228)396-0486


MICHAEL R. COSTELLI
REGISTERED PROFESSIONAL ENGINEER
NO. 6653
STATE OF MISSISSIPPI
4/24/20

| NO. | DATE | REVISION/ISSUE |
|---|---|---|
| 1 | 06.11.20 | REVISION 01 |

# COFFEE CREEK STORM WATER OUTFALL

ENLARGED FOUNDATION PLAN

DATE 04-24-2020
SCALE AS NOTED
DRAWN BY RSS
CHECKED BY MRC
PROJECT NO. 19049
SHEET NUMBER S2.1

G:\Drawings\2018\1832.1 Sand Beach Drainage Project Phase II - Coffee Creek\Structural\1832.1 Coffee Creek Outfall Structural.dwg, S2.1, 6/17/2020 3:10:01 PM, AutoCAD PDF (General Documentation).pc3

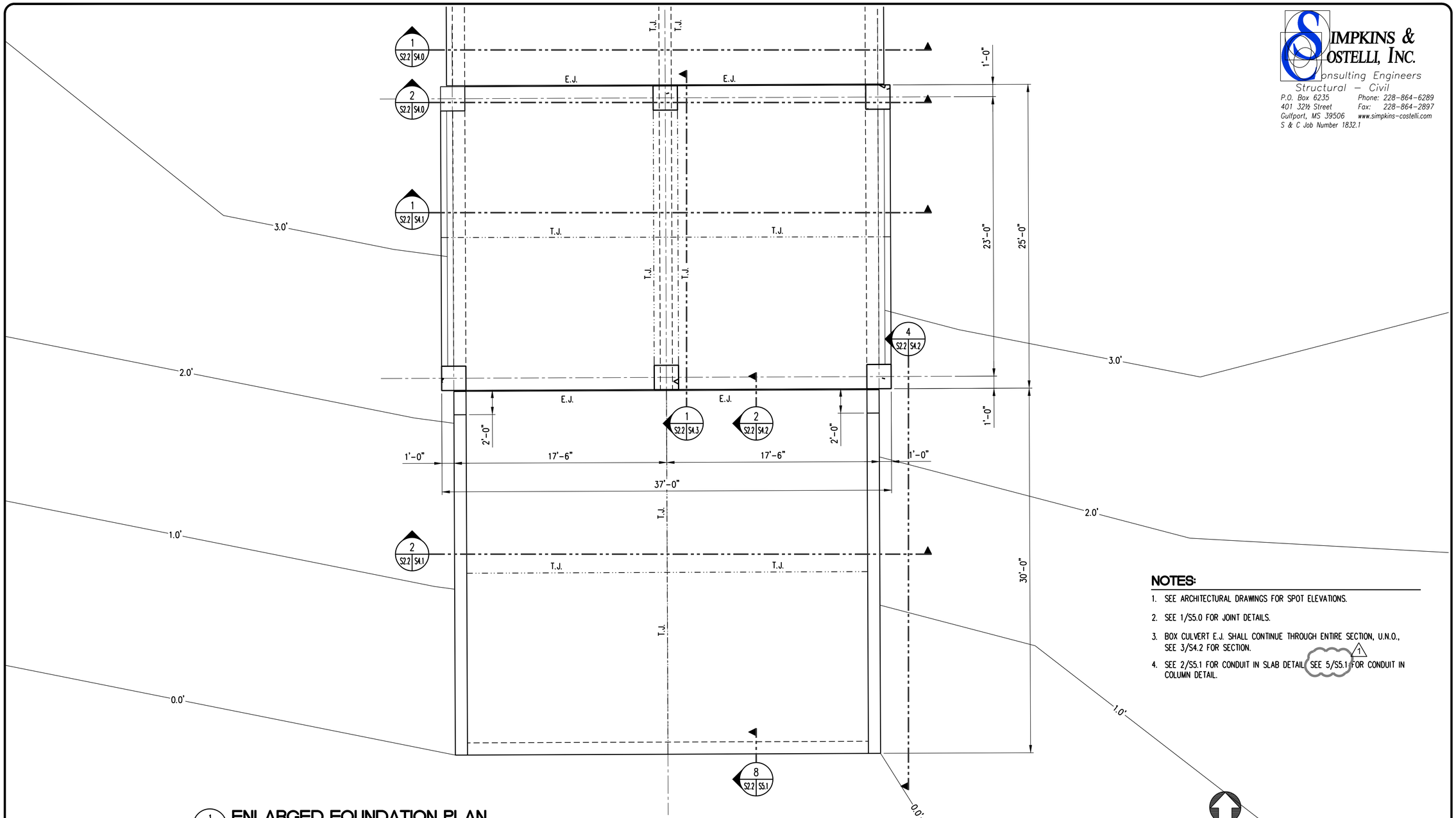


## NOTES:

1. SEE ARCHITECTURAL DRAWINGS FOR SPOT ELEVATIONS.
2. SEE 1/S5.0 FOR JOINT DETAILS.
3. BOX CULVERT E.J. SHALL CONTINUE THROUGH ENTIRE SECTION, U.N.O., SEE 3/S4.2 FOR SECTION.
4. SEE 2/S5.1 FOR CONDUIT IN SLAB DETAIL, SEE 5/S5.1 FOR CONDUIT IN COLUMN DETAIL.

1 / S2.1 S2.2 **ENLARGED FOUNDATION PLAN**
SCALE: 1/4" = 1'-0"


SIMPKINS & COSTELLI, INC.
Consulting Engineers
Structural – Civil
P.O. Box 6235
401 32½ Street
Gulfport, MS 39506
S & C Job Number 1832.1
Phone: 228-864-6289
Fax: 228-864-2897
www.simpkins-costelli.com

COVINGTON
CIVIL AND ENVIRONMENTAL
2510 14TH STREET, SUITE 1010
GULFPORT, MISSISSIPPI 39501
Office: (228)396-0486


MICHAEL R. COSTELLI
REGISTERED PROFESSIONAL ENGINEER
NO. 6653
STATE OF MISSISSIPPI
4/24/20

| NO. | DATE | REVISION/ISSUE |
|---|---|---|
| 1 | 06.11.20 | REVISION 01 |

# COFFEE CREEK STORM WATER OUTFALL

ENLARGED FOUNDATION PLAN

| | |
|---|---|
| DATE 04-24-2020 | SHEET NUMBER S2.2 |
| SCALE AS NOTED | |
| DRAWN BY RSS / CHECKED BY MRC | |
| PROJECT NO. 19049 | |

G:\Drawings\2018\1832.1 Sand Beach Drainage Project Phase II - Coffee Creek\Structural\1832.1 Coffee Creek Outfall Structural.dwg, S2.2, 6/11/2020 3:10:02 PM, AutoCAD PDF (General Documentation).pc3

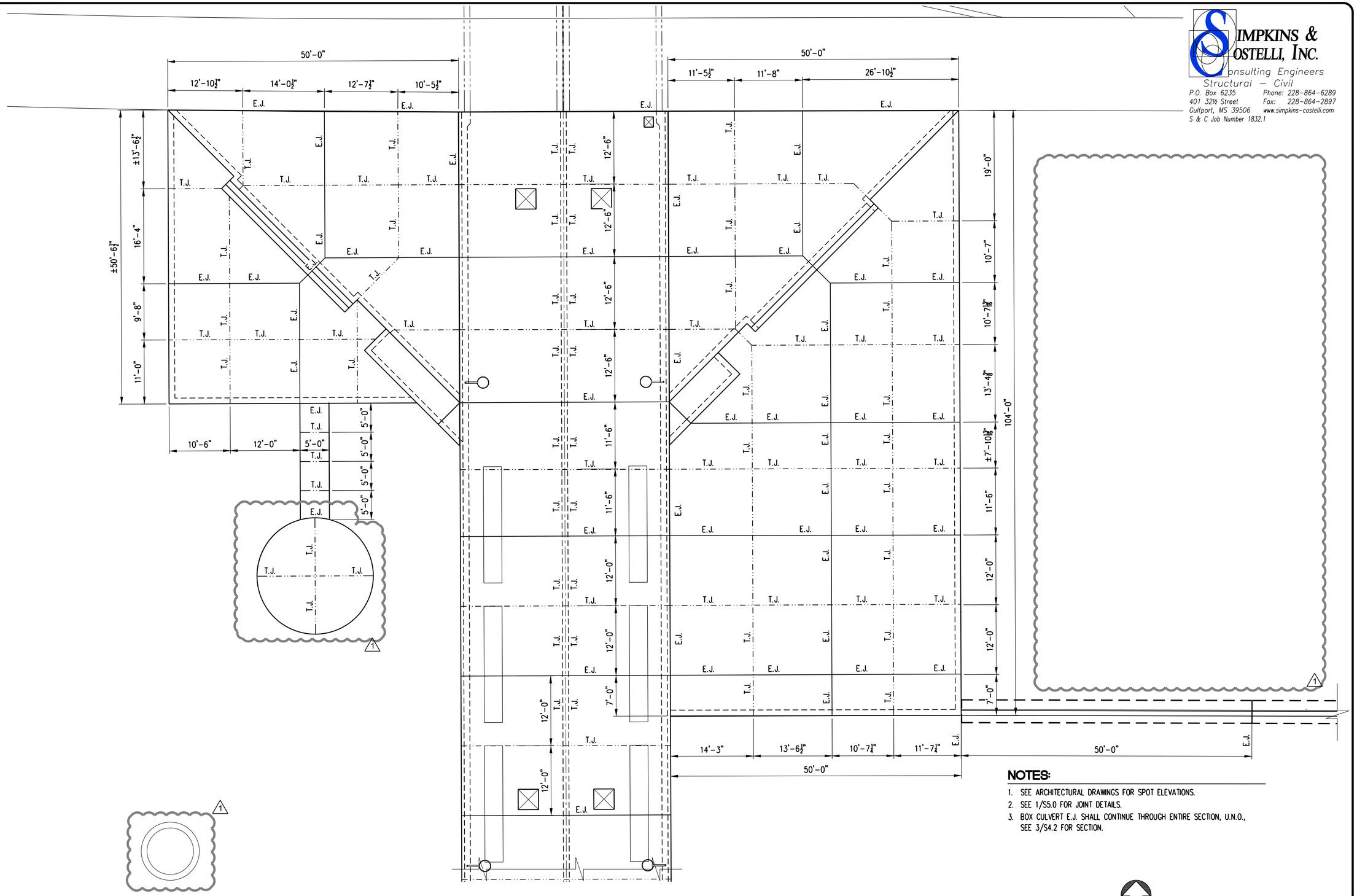


## PLAZA JOINT PATTERN PLAN

SCALE: 1/8" = 1'-0"

NORTH

### NOTES:

1. SEE ARCHITECTURAL DRAWINGS FOR SPOT ELEVATIONS.
2. SEE 1/S5.0 FOR JOINT DETAILS.
3. BOX CULVERT E.J. SHALL CONTINUE THROUGH ENTIRE SECTION, U.N.O., SEE 3/S4.2 FOR SECTION.


SIMPKINS & COSTELLI, INC.
Consulting Engineers
Structural – Civil
P.O. Box 6235
401 32½ Street
Gulfport, MS 39506
S & C Job Number 1832.1
Phone: 228-864-6289
Fax: 228-864-2897
www.simpkins-costelli.com

COVINGTON
CIVIL AND ENVIRONMENTAL
2510 14TH STREET, SUITE 1010
GULFPORT, MISSISSIPPI 39501
Office: (228)396-0486


MICHAEL R. COSTELLI
REGISTERED PROFESSIONAL ENGINEER
NO. 6653
STATE OF MISSISSIPPI
4/24/20

| NO. | DATE | REVISION/ISSUE |
|---|---|---|
| 1 | 06.11.20 | REVISION 01 |

# COFFEE CREEK STORM WATER OUTFALL

PLAZA JOINT PATTERN PLAN

| | |
|---|---|
| DATE 04-24-2020 | SHEET NUMBER S2.3 |
| SCALE AS NOTED | |
| DRAWN BY RSS / CHECKED BY MRC | |
| PROJECT NO. 19049 | |

G:\Drawings\2018\1832.1 Sand Beach Drainage Project Phase II - Coffee Creek Outfall\Structural\1832.1 Coffee Creek Outfall Structural.dwg, S2.3, 6/17/2020 3:10:02 PM, AutoCAD PDF (General Documentation).pc3

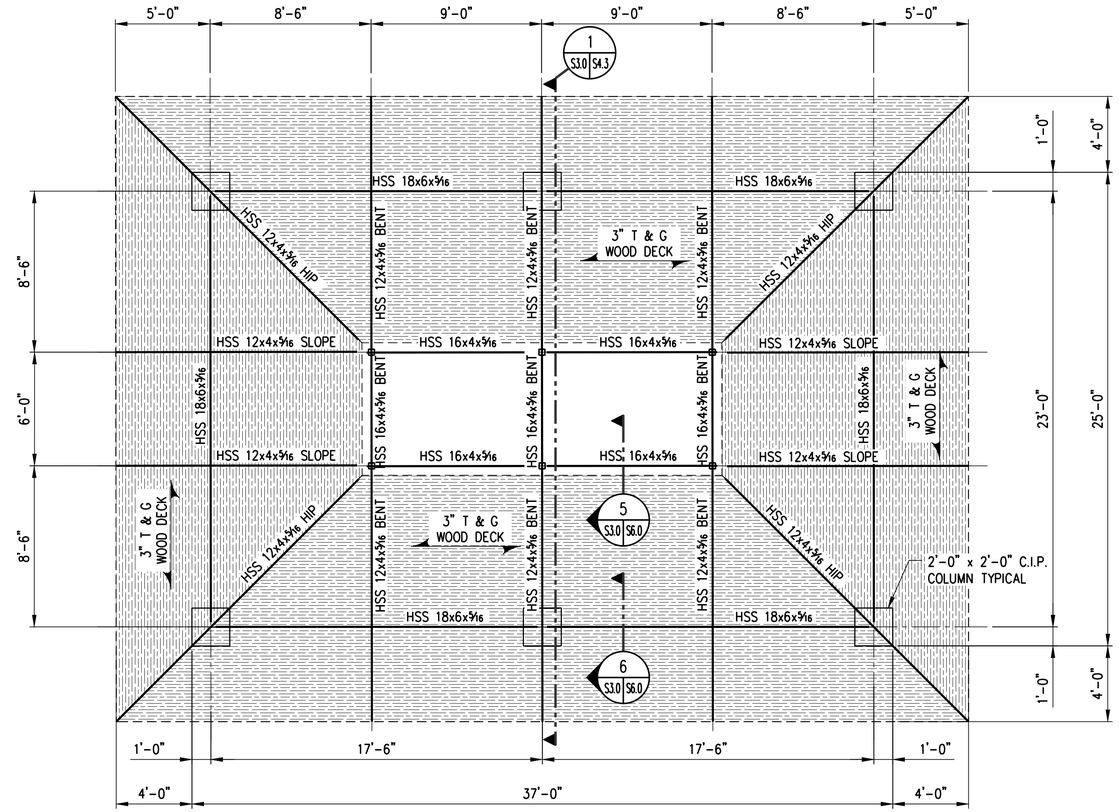


## LOW ROOF FRAMING PLAN

SCALE: 1/4" = 1'-0"

NORTH

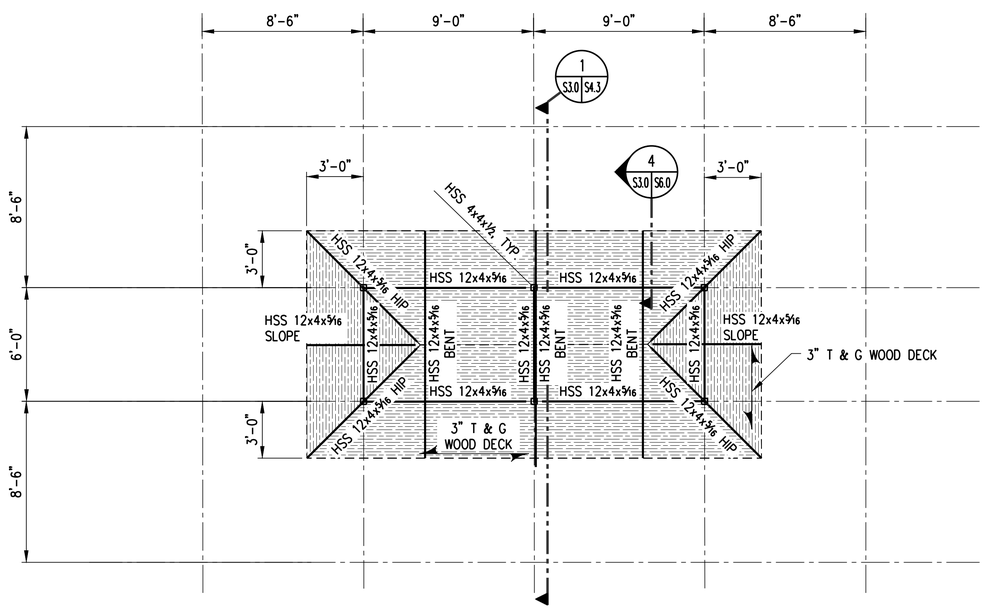


## HIGH ROOF FRAMING PLAN

SCALE: 1/4" = 1'-0"

NORTH

## NOTES:

1. SHOP WELD BENTS AND GRIND SMOOTH ALL WELDS PRIOR TO GALVANIZING.
2. SEE ARCHITECTURAL FOR ADDITIONAL REQUIREMENTS.


SIMPKINS & COSTELLI, INC.
Consulting Engineers
Structural – Civil
P.O. Box 6235
401 32½ Street
Gulfport, MS 39506
S & C Job Number 1832.1
Phone: 228-864-6289
Fax: 228-864-2897
www.simpkins-costelli.com

COVINGTON
CIVIL AND ENVIRONMENTAL
2510 14TH STREET, SUITE 1010
GULFPORT, MISSISSIPPI 39501
Office: (228)396-0486


MICHAEL R. COSTELLI
REGISTERED PROFESSIONAL ENGINEER
NO. 6653
STATE OF MISSISSIPPI
4/24/20

| NO. | DATE | REVISION/ISSUE |
|---|---|---|
| | | |

# COFFEE CREEK STORM WATER OUTFALL

ROOF FRAMING PLANS

| | |
|---|---|
| DATE 04-24-2020 | SHEET NUMBER S3.0 |
| SCALE AS NOTED | |
| DRAWN BY RSS / CHECKED BY MRC | |
| PROJECT NO. 19049 | |

G:\Drawings\2018\1832.1 Sand Beach Drainage Project Phase II - Coffee Creek\Structural\1832.1 Coffee Creek Outfall Structural.dwg, S3.0, 6/17/2020 3:10:03 PM, AutoCAD PDF (General Documentation).pc3

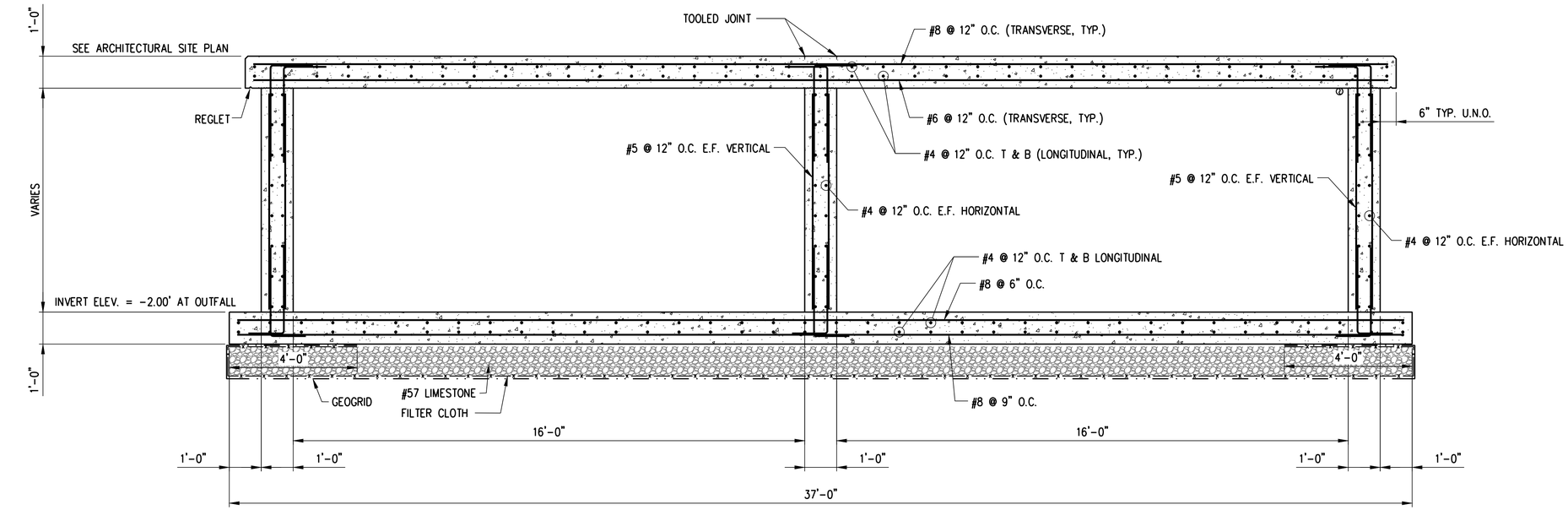


1 S2.1 S4.0 S2.2

## DETAIL

SCALE: 1/2" = 1'-0"

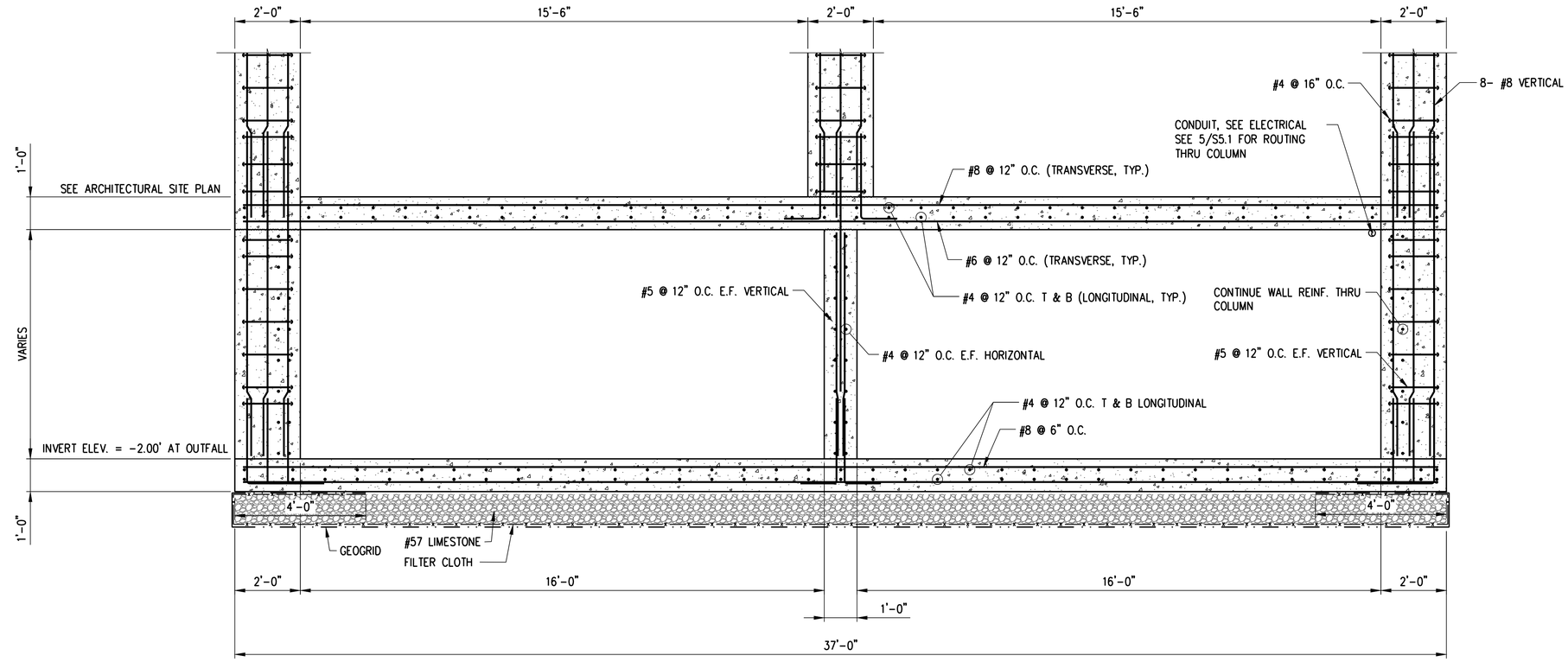


2 S2.2 S4.0

## DETAIL

SCALE: 1/2" = 1'-0"


SIMPKINS & COSTELLI, INC.
Consulting Engineers
Structural – Civil
P.O. Box 6235
401 32½ Street
Gulfport, MS 39506
S & C Job Number 1832.1
Phone: 228-864-6289
Fax: 228-864-2897
www.simpkins-costelli.com

COVINGTON
CIVIL AND ENVIRONMENTAL
2510 14TH STREET, SUITE 1010
GULFPORT, MISSISSIPPI 39501
Office: (228)396-0486


MICHAEL R. COSTELLI
REGISTERED PROFESSIONAL ENGINEER
NO. 6653
STATE OF MISSISSIPPI
4/24/20

| NO. | DATE | REVISION/ISSUE |
|---|---|---|
| | | |

# COFFEE CREEK STORM WATER OUTFALL

DETAILS

| | |
|---|---|
| DATE 04-24-2020 | SHEET NUMBER S4.0 |
| SCALE AS NOTED | |
| DRAWN BY RSS | CHECKED BY MRC |
| PROJECT NO. 19049 | |

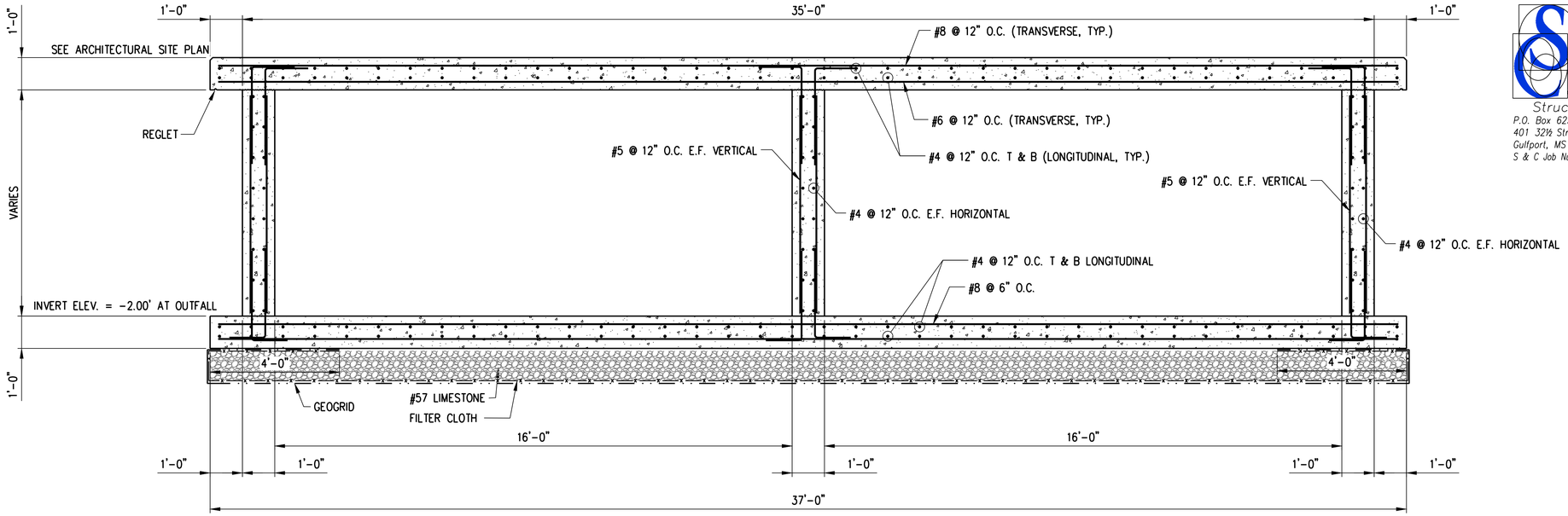


1 S2.2 S4.1 **DETAIL**
SCALE: 1/2" = 1'-0"

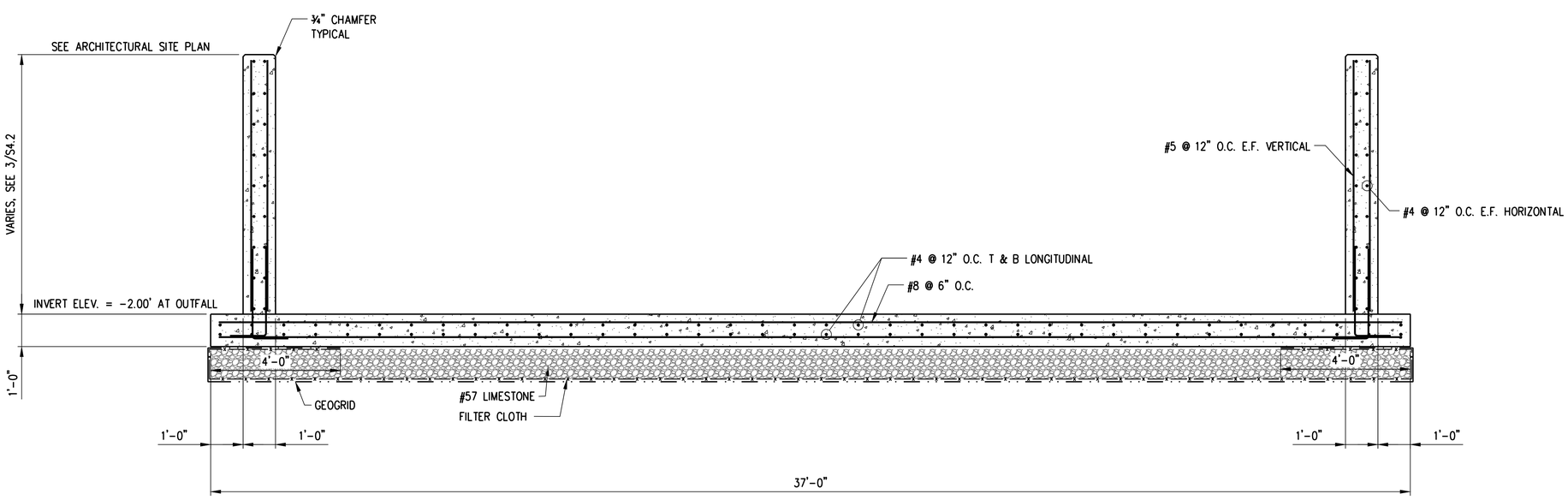


S5.1 2 S2.2 S4.1 **DETAIL**
SCALE: 1/2" = 1'-0"


SIMPKINS & COSTELLI, INC.
Consulting Engineers
Structural – Civil
P.O. Box 6235
401 32½ Street
Gulfport, MS 39506
S & C Job Number 1832.1
Phone: 228-864-6289
Fax: 228-864-2897
www.simpkins-costelli.com

COVINGTON
CIVIL AND ENVIRONMENTAL
2510 14TH STREET, SUITE 1010
GULFPORT, MISSISSIPPI 39501
Office: (228)396-0486


MICHAEL R. COSTELLI
REGISTERED PROFESSIONAL ENGINEER
NO. 6653
STATE OF MISSISSIPPI
4/24/20

| NO. | DATE | REVISION/ISSUE |
|---|---|---|
| | | |

# COFFEE CREEK STORM WATER OUTFALL

## DETAILS

DATE 04-24-2020
SCALE AS NOTED
DRAWN BY RSS
CHECKED BY MRC
PROJECT NO. 19049
SHEET NUMBER S4.1

G:\Drawings\2018\1832.1-Sand Beach Drainage Project Phase II - Coffee Creek\Structural\1832.1 Coffee Creek Outfall Structural.dwg, S4.1, 6/17/2020 3:10:05 PM, AutoCAD PDF (General Documentation).pc3

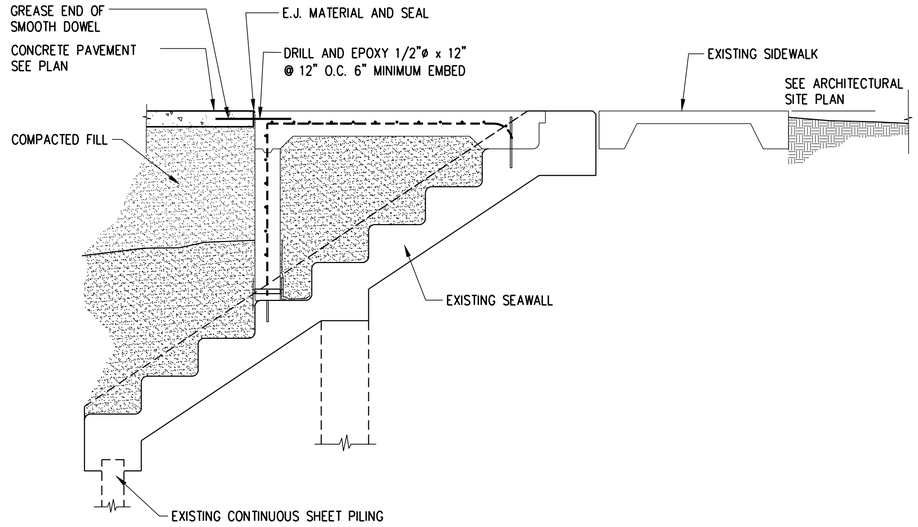


## 1 DETAIL
S2.1 | S4.2 SCALE: 1/2" = 1'-0"

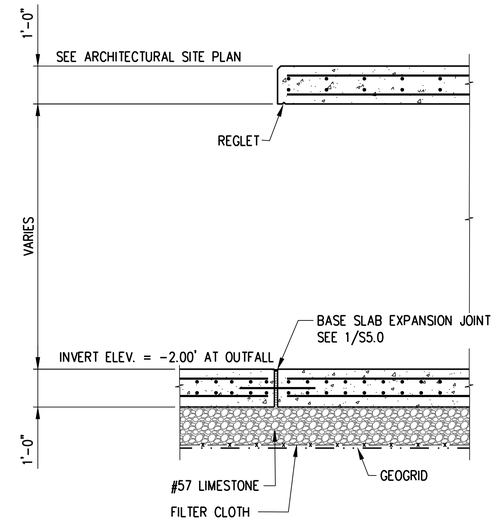


## 2 DETAIL
S2.2 | S4.2 SCALE: 1/2" = 1'-0"

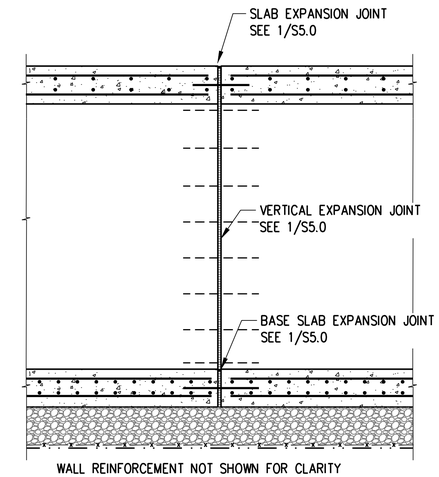


## 3 BOX CULVERT JOINT SECTION
S2.1 | S4.2 SCALE: 1/2" = 1'-0"


SIMPKINS & COSTELLI, INC.
Consulting Engineers
Structural – Civil
P.O. Box 6235
401 32½ Street
Gulfport, MS 39506
Phone: 228-864-6289
Fax: 228-864-2897
www.simpkins-costelli.com
S & C Job Number 1832.1

COVINGTON
CIVIL AND ENVIRONMENTAL
2510 14TH STREET, SUITE 1010
GULFPORT, MISSISSIPPI 39501
Office: (228)396-0486


MICHAEL R. COSTELLI REGISTERED PROFESSIONAL ENGINEER NO. 6653 STATE OF MISSISSIPPI
4/24/20

| NO. | DATE | REVISION/ISSUE |
|---|---|---|
| | | |

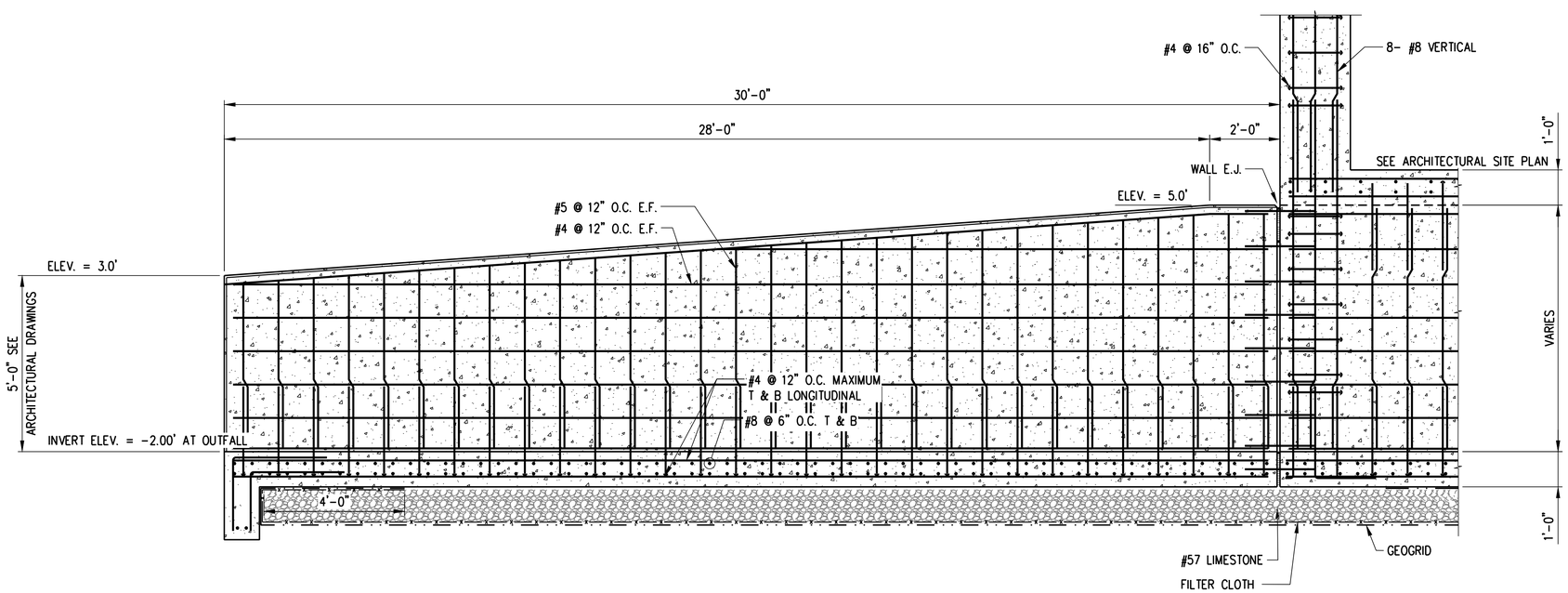


## 4 DETAIL
S2.2 | S4.2 SCALE: 1/2" = 1'-0"

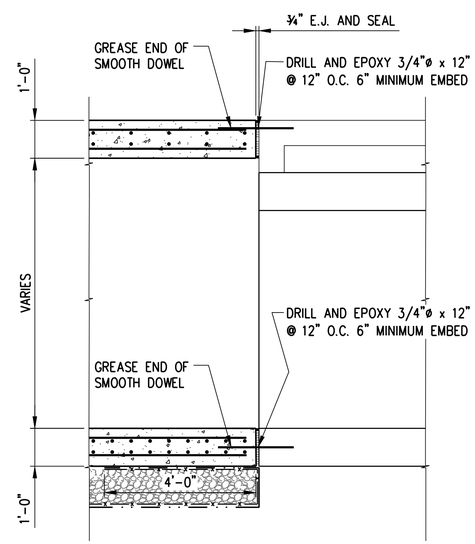


## 5 DETAIL
S2.1 | S4.2 SCALE: 1/2" = 1'-0"

# COFFEE CREEK STORM WATER OUTFALL

DETAILS

| | |
|---|---|
| DATE 04-24-2020 | SHEET NUMBER S4.2 |
| SCALE AS NOTED | |
| DRAWN BY RSS / CHECKED BY MRC | |
| PROJECT NO. 19049 | |

G:\Drawings\2018\1832.1 Sand Beach Drainage Project Phase II - Coffee Creek\Structural\1832.1 Coffee Creek Outfall Structural.dwg, S4.2, 6/11/2020 3:10:06 PM, AutoCAD PDF (General Documentation).pc3

SIMPKINS & COSTELLI, INC.
Consulting Engineers
Structural – Civil
P.O. Box 6235
401 32½ Street
Gulfport, MS 39506
S & C Job Number 1832.1
Phone: 228-864-6289
Fax: 228-864-2897
www.simpkins-costelli.com

COVINGTON
CIVIL AND ENVIRONMENTAL
2510 14TH STREET, SUITE 1010
GULFPORT, MISSISSIPPI 39501
Office: (228)396-0486

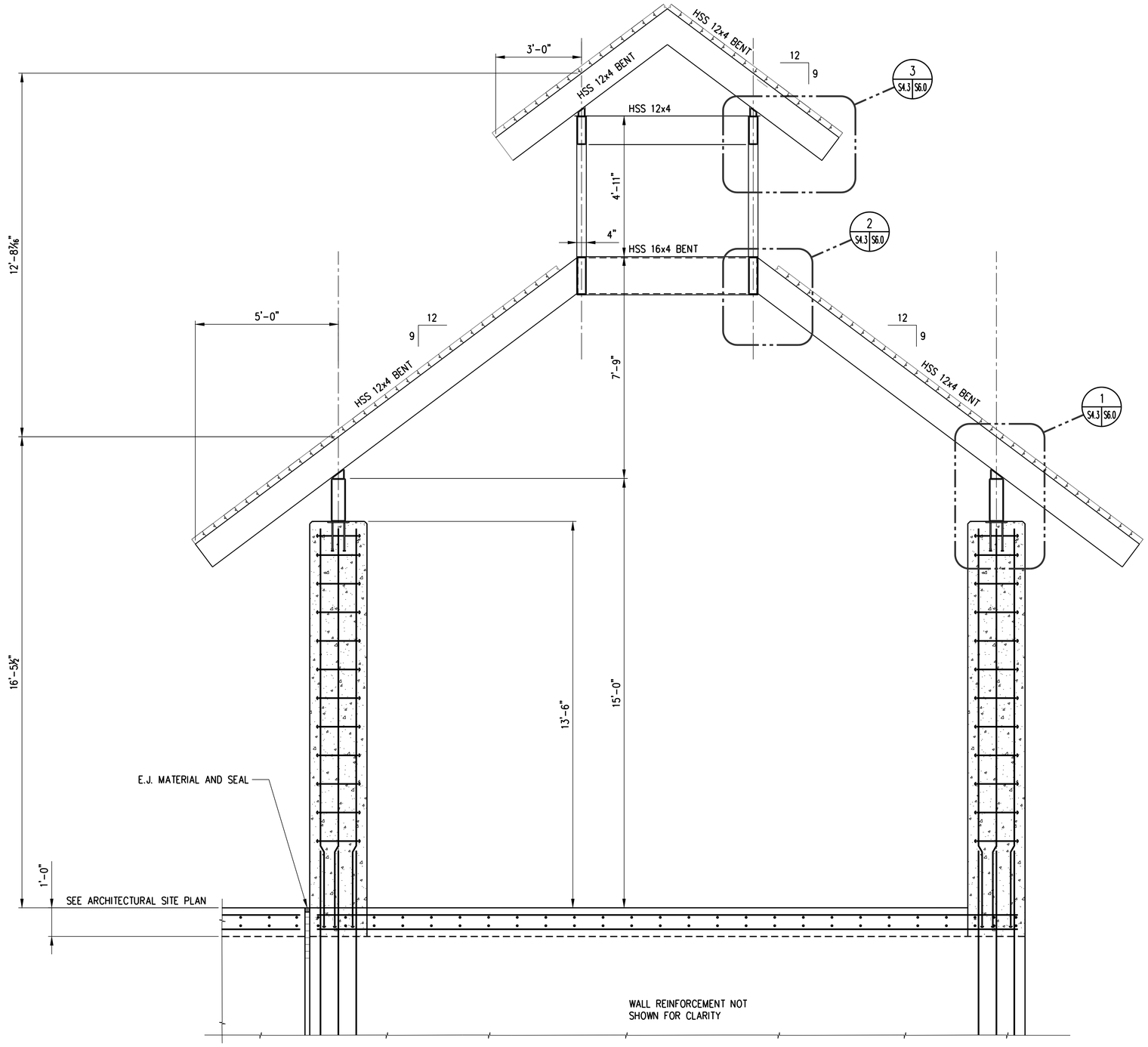


NOTE:
1. SEE ARCHITECTURAL DRAWINGS FOR LOUVERS.

1 S2.2 S5.0 S3.0 **DETAIL**
SCALE: 1/2" = 1'-0"

MICHAEL R. COSTELLI
REGISTERED PROFESSIONAL ENGINEER
NO. 6653
STATE OF MISSISSIPPI
4/24/20

| NO. | DATE | REVISION/ISSUE |
|---|---|---|
| | | |

# COFFEE CREEK STORM WATER OUTFALL

DETAILS

| | |
|---|---|
| DATE 04-24-2020 | SHEET NUMBER S4.3 |
| SCALE AS NOTED | |
| DRAWN BY RSS / CHECKED BY MRC | |
| PROJECT NO. 19049 | |

G:\Drawings\2018\1832.1 Sand Beach Drainage Project Phase II - Coffee Creek\Structural\1832.1 Coffee Creek Outfall Structural.dwg, S4.3, 6/11/2020 3:10:07 PM, AutoCAD PDF (General Documentation).pc3

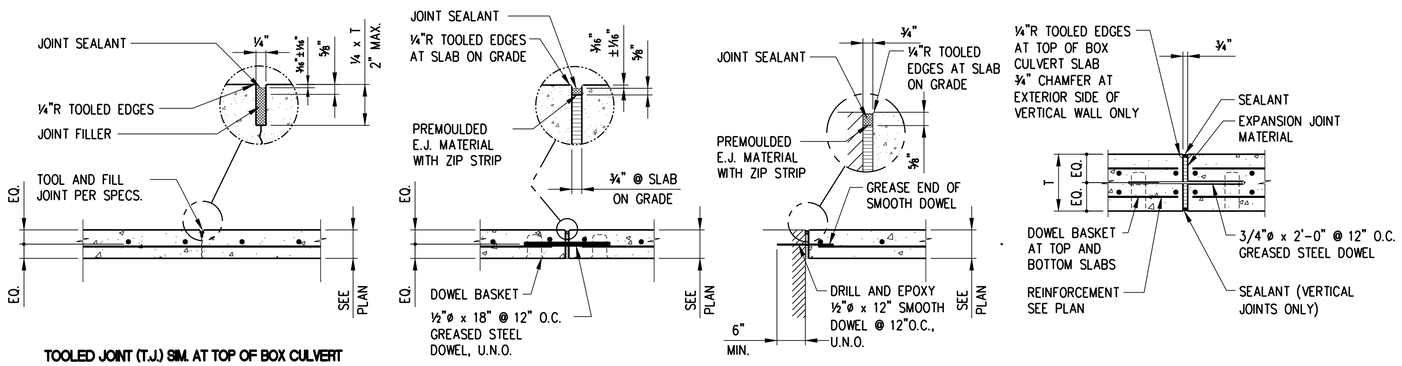


## 1 JOINT DETAILS
S2.0 | S5.0 SCALE: 3/4" = 1'-0"

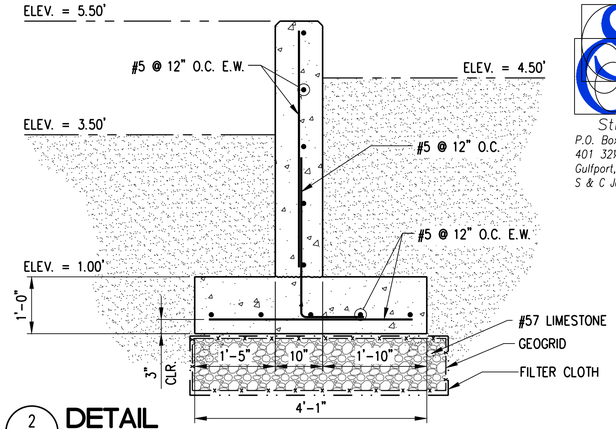


## 2 DETAIL
S2.0 | S5.0 SCALE: 3/4" = 1'-0"


SIMPKINS & COSTELLI, INC.
Consulting Engineers
Structural – Civil
P.O. Box 6235
401 32½ Street
Gulfport, MS 39506
Phone: 228-864-6289
Fax: 228-864-2897
www.simpkins-costelli.com
S & C Job Number 1832.1



COVINGTON
CIVIL AND ENVIRONMENTAL
2510 14TH STREET, SUITE 1010
GULFPORT, MISSISSIPPI 39501
Office: (228)396-0486


MICHAEL R. COSTELLI REGISTERED PROFESSIONAL ENGINEER NO. 6653 STATE OF MISSISSIPPI
4/24/20

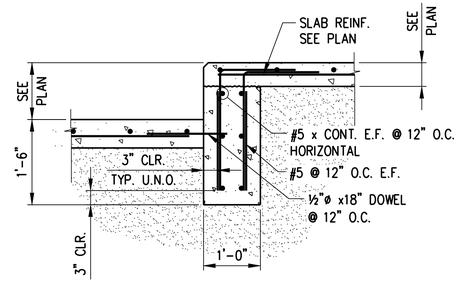


## 3 DETAIL
S2.1 | S5.0 SCALE: 3/4" = 1'-0"

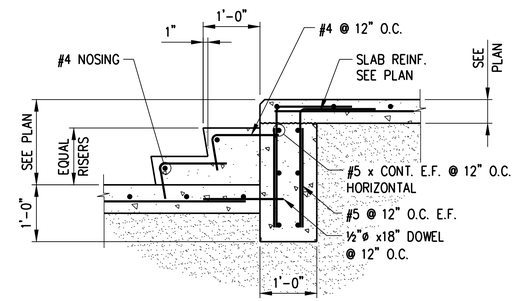


## 4 DETAIL
S2.1 | S5.0 3/4" = 1'-0"

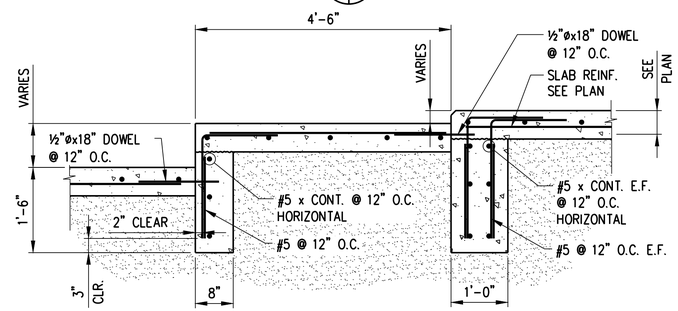


## 5 DETAIL
S2.1 | S5.0 SCALE: 3/4" = 1'-0"

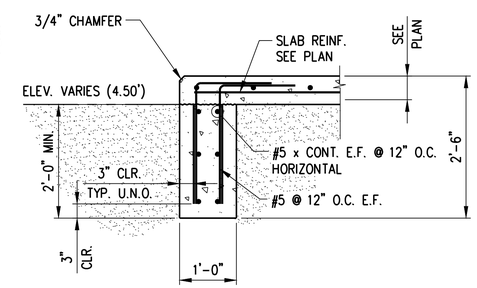


## 6 DETAIL
S2.1 | S5.0 SCALE: 3/4" = 1'-0"

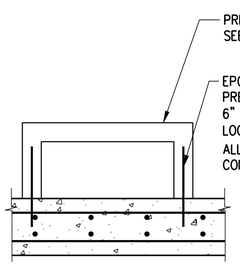


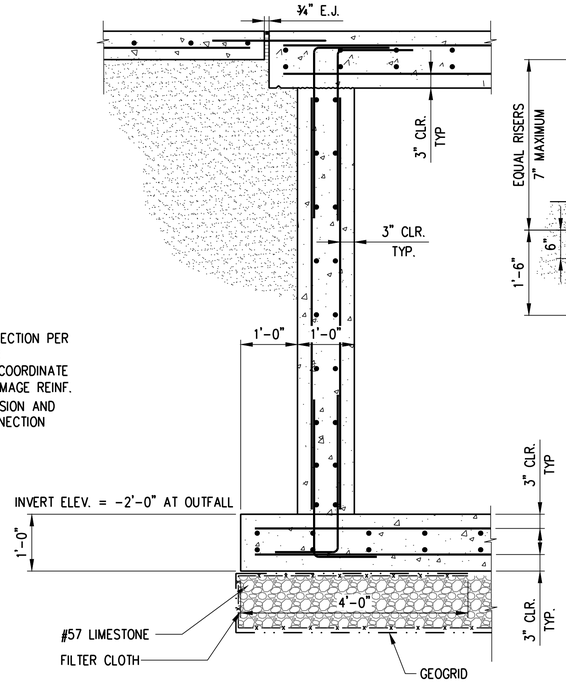


## 7 DETAIL
S2.1 | S5.0 SCALE: 3/4" = 1'-0"

## 8 DETAIL
S2.1 | S5.0 SCALE: 3/4" = 1'-0"

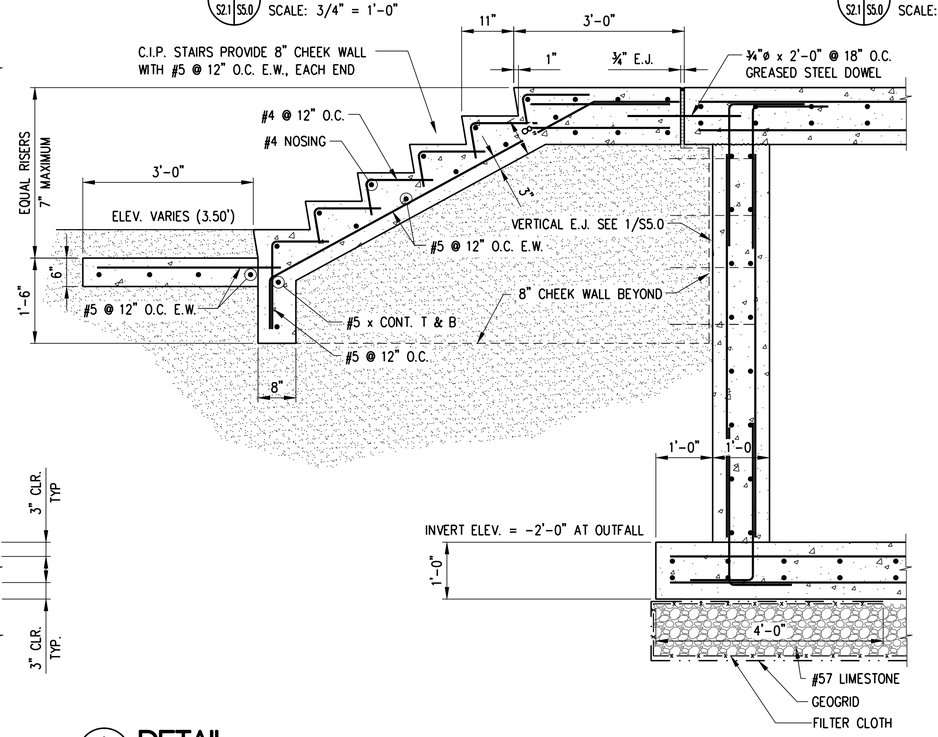


## 9 DETAIL
S2.1 | S5.0 SCALE: 3/4" = 1'-0"

| NO. | DATE | REVISION/ISSUE |
|---|---|---|
| 1 | 06.11.20 | REVISION 01 |

# COFFEE CREEK STORM WATER OUTFALL

DETAILS

| | |
|---|---|
| DATE 04-24-2020 | SHEET NUMBER |
| SCALE AS NOTED | S5.0 |
| DRAWN BY RSS | CHECKED BY MRC |
| PROJECT NO. 19049 | |

G:\Drawings\2018\1832.1 Sand Beach Drainage Project Phase II - Coffee Creek\Coffee Creek Outfall\Structural\1832.1 Coffee Creek Outfall Structural.dwg, S5.0, 6/11/2020 3:10:07 PM, AutoCAD PDF (General Documentation).pc3

SIMPKINS & COSTELLI, INC.
Consulting Engineers
Structural – Civil
P.O. Box 6235
401 32½ Street
Gulfport, MS 39506
Phone: 228-864-6289
Fax: 228-864-2897
www.simpkins-costelli.com
S & C Job Number 1832.1

COVINGTON
CIVIL AND ENVIRONMENTAL
2510 14TH STREET, SUITE 1010
GULFPORT, MISSISSIPPI 39501
Office: (228)396-0486

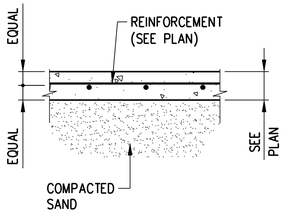


1 S2.1 S5.1 **DETAIL**
SCALE: 3/4" = 1'-0"

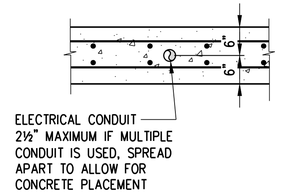


2 S2.1 S5.1 **DETAIL**
SCALE: 3/4" = 1'-0"

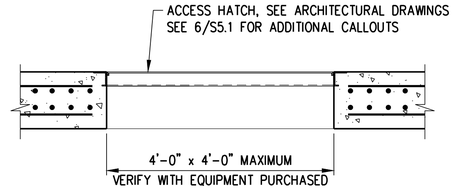


3 S2.1 S5.1 **DETAIL**
SCALE: 3/4" = 1'-0"

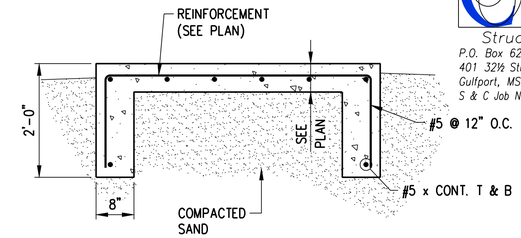


4 S2.1 S5.1 **DETAIL**
SCALE: 3/4" = 1'-0"

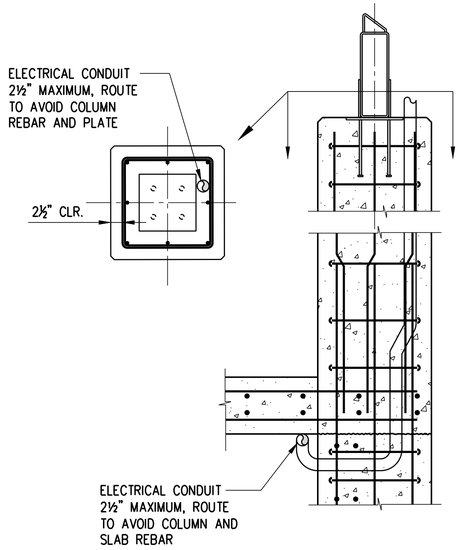


5 S2.1 S5.1 **DETAIL**
SCALE: 3/4" = 1'-0"
S2.2
S4.0
1

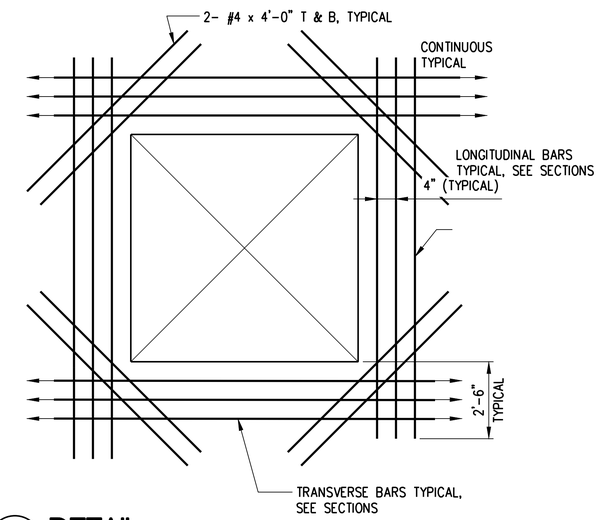


6 S5.1 S5.1 **DETAIL**
SCALE: 3/4" = 1'-0"

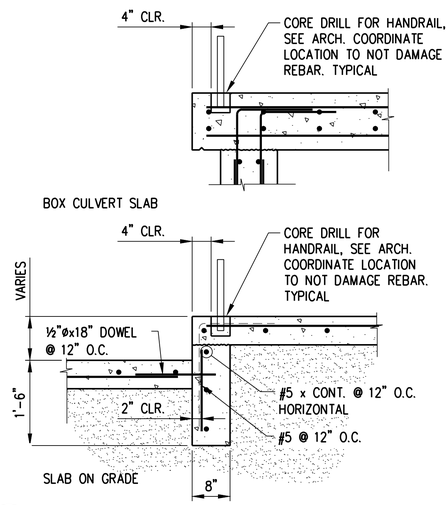


7 M5.0 S5.1 **DETAIL**
SCALE: 3/4" = 1'-0"

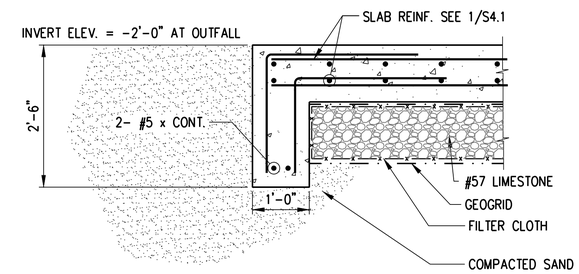


8 S2.2 S5.1 **DETAIL**
SCALE: 3/4" = 1'-0"

1

| NO. | DATE | REVISION/ISSUE |
|---|---|---|
| 1 | 06.11.20 | REVISION 01 |

# COFFEE CREEK STORM WATER OUTFALL

DETAILS

| | |
|---|---|
| DATE 04-24-2020 | SHEET NUMBER S5.1 |
| SCALE AS NOTED | |
| DRAWN BY RSS / CHECKED BY MRC | |
| PROJECT NO. 19049 | |

Drawings\2019\1832.1 Sand Beach Drainage Project Phase II - Coffee Creek\Structural\1832.1 Coffee Creek Outfall Structural.dwg, S5.1, 6/11/2020 3:10:08 PM, AutoCAD PDF (General Documentation).pc3

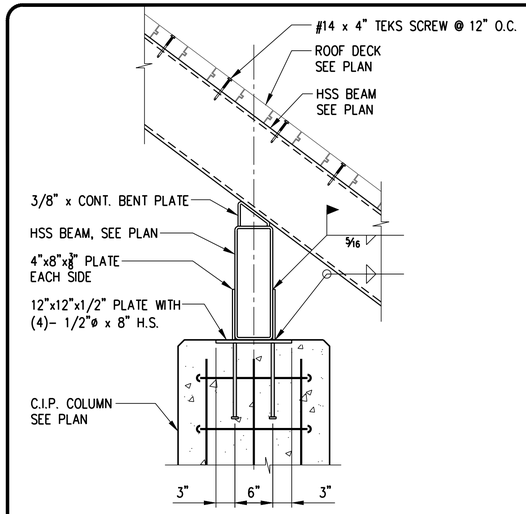


1 S4.3 S6.0 **DETAIL**
SCALE: 1" = 1'-0"

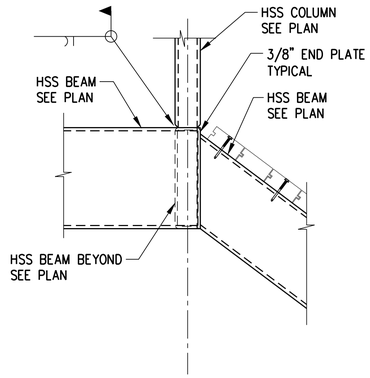


2 S4.3 S6.0 **DETAIL**
SCALE: 1" = 1'-0"

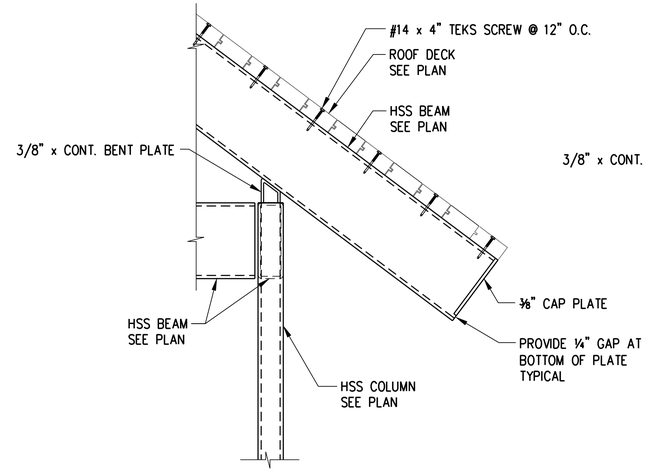


3 S4.3 S6.0 **DETAIL**
SCALE: 1" = 1'-0"

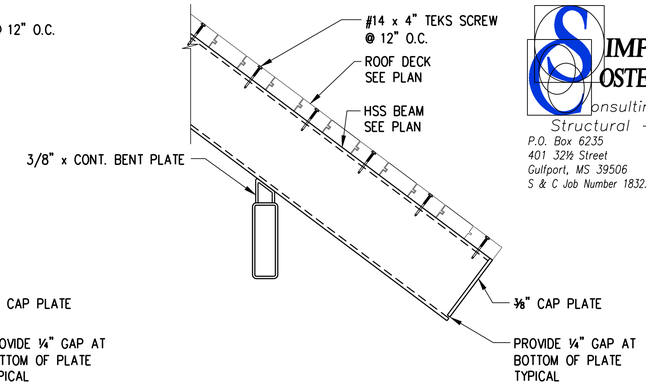


4 S3.0 S6.0 **DETAIL**
SCALE: 1" = 1'-0"

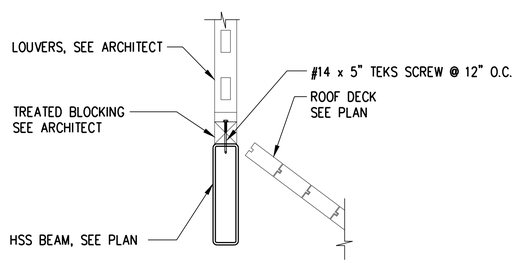


5 S3.0 S6.0 **DETAIL**
SCALE: 1" = 1'-0"

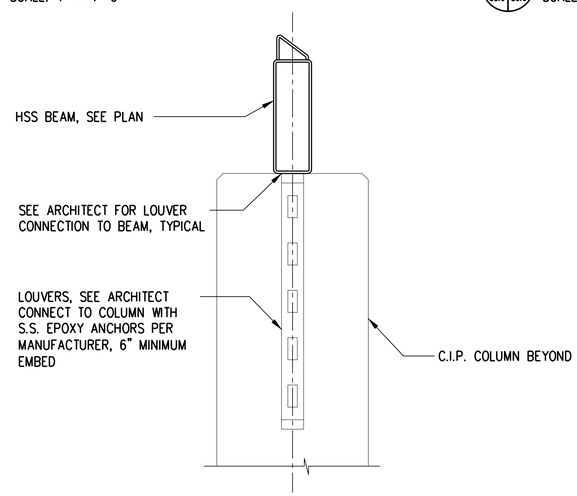


6 S3.0 S6.0 **DETAIL**
SCALE: 1" = 1'-0"


SIMPKINS & COSTELLI, INC.
Consulting Engineers
Structural – Civil
P.O. Box 6235
401 32½ Street
Gulfport, MS 39506
Phone: 228-864-6289
Fax: 228-864-2897
www.simpkins-costelli.com
S & C Job Number 1832.1

COVINGTON
CIVIL AND ENVIRONMENTAL
2510 14TH STREET, SUITE 1010
GULFPORT, MISSISSIPPI 39501
Office: (228)396-0486


MICHAEL R. COSTELLI
REGISTERED PROFESSIONAL ENGINEER
NO. 6653
STATE OF MISSISSIPPI
4/24/20

| NO. | DATE | REVISION/ISSUE |
|---|---|---|
| | | |

# COFFEE CREEK STORM WATER OUTFALL

## DETAILS

| | |
|---|---|
| DATE 04-24-2020 | SHEET NUMBER S6.0 |
| SCALE AS NOTED | |
| DRAWN BY RSS / CHECKED BY MRC | |
| PROJECT NO. 19049 | |

G:\Drawings\2018\1832.1 Sand Beach Drainage Project Phase II - Coffee Creek Outfall\Structural\1832.1 Coffee Creek Outfall Structural.dwg, S6.0, 6/11/2020 3:10:09 PM, AutoCAD PDF (General Documentation).pc3

# ELECTRICAL LEGEND

## LIGHTING

- EXISTING STREET LIGHT TO REMAIN
- WALL MOUNTED FIXTURE
- POLE AND POLE MOUNTED FIXTURE
- SURFACE/STRUCTURE MOUNTED FIXTURE

## SWITCHGEAR

- F — FUSED SAFETY SWITCH NEMA 3R AT WET LOCATIONS
- J — JUNCTION/PULL BOX, FLUSH IN GRADE COMPOSITE, CONCRETE BOX, QUAZITE OR EQUAL

## CONDUIT AND WIRE

- CONDUIT CONCEALED IN WALL OR COLUMN
- CONDUIT BELOW GRADE OR CONCEALED IN COLUMN
- CONDUIT EXPOSED AND PAINTED
- CONDUIT UP
- CONDUIT DOWN
- CONTINUATION OF CONDUIT RUN
- CIRCUIT CONDUCTORS IN CONDUIT
- MULTIPLE CIRCUIT CONDUCTORS IN CONDUIT WITH NEUTRALS
- GROUND CONDUCTORS IN CONDUIT

## LUMINAIRE SCHEDULE

| MARK | LAMPS | MOUNTING | DESCRIPTION | MANUFACTURER | EQUALS |
|---|---|---|---|---|---|
| SP1 | LED | POLE | LED, POLE MOUNTED INDIRECT ASYMMETRICAL AREA LIGHT | LANDSCAPE FORMS ARNE INDIRECT ARP36C2-72-59-36-4000K-700-ASYMMETRICAL | OR PRE-APPROVED EQUAL |
| POLE | - | - | 16' DECORATIVE POLE | LANDSCAPE FORMS ARNE INDIRECT 16' POLE - BURSHED ALUMINUM | OR PRE-APPROVED EQUAL |
| W1 | LED | SURFACE BEAM | LED, EXTERIOR ADJUSTABLE FLOOD | LUMENFACADE LOGH-HO-120-48-40K-30x30-WAMH6-CC-NO-ETE CABLES | OR PRE-APPROVED EQUAL |
| W2 | LED | WALL; 12'-0" AFF TO CENTER | LED, EXTERIOR UP / DOWN LIGHT | BEGA LIGHTING 33816-K4-CUSTOM COLOR | OR PRE-APPROVED EQUAL |

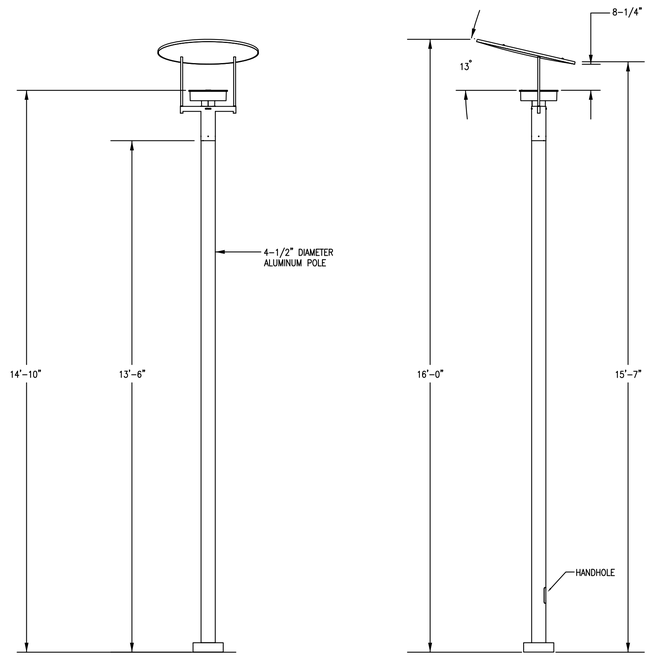


1 TYPICAL "SP1" POLE INSTALLATION DETAIL
NO SCALE

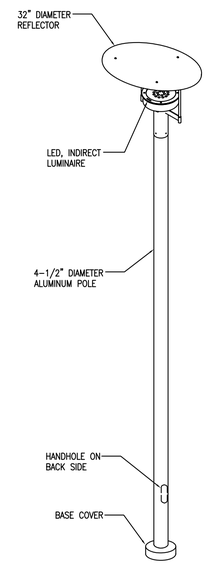


LIGHTING STANDARD NOTES:

1. INSTALL POLES LEVEL AND PLUMB, UTILIZE LEVELING NUTS ON ANCHOR BOLTS AS REQUIRED.
2. ANCHOR BOLTS TO BE SIZED PER MANUFACTURER'S RECOMMENDATION.
3. ANCHOR BOLTS SHALL BE EMBEDDED INTO CONCRETE SLAB AT PLAZA AREA.
4. INSTALL ANCHOR BOLTS TO MATCH BOLT PATTERN DIAMETER GIVEN BY POLE MANUFACTURER.
5. SEE PLANS FOR ROUTING OF CONDUITS AT POLES.

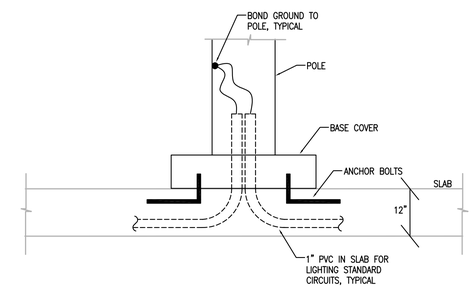


2 POLE BASE DETAIL
NO SCALE

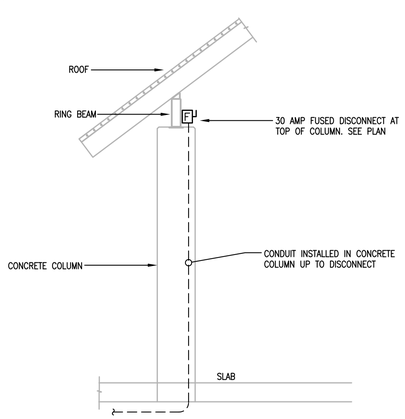


3 DISCONNECT INSTALLATION DETAIL
NO SCALE

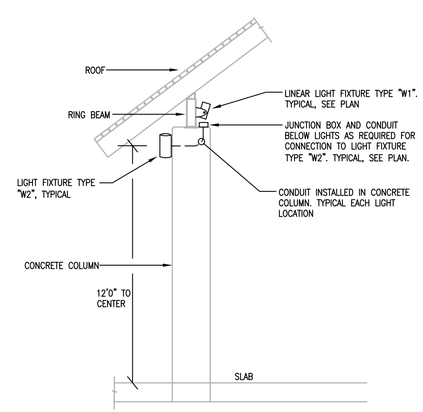


4 LIGHT FIXTURE INSTALLATION DETAIL
NO SCALE

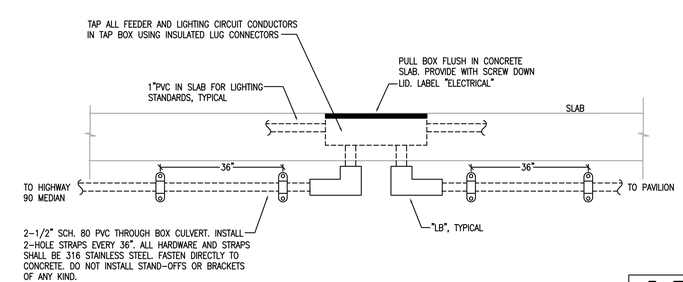


5 PULLBOX DETAIL AT PLAZA
NO SCALE


WELCON
ELECTRICAL CONSULTANTS, PLLC
14116 CUSTOM'S BLVD., SUITE #111
GULFPORT, MISSISSIPPI 39503
228.822.8000 - FAX 228.206.3000
WEC PROJECT #: 20-CVE-01



COVINGTON
CIVIL AND ENVIRONMENTAL
2510 14TH STREET, SUITE 1010
GULFPORT, MISSISSIPPI 39501
Office: (228)396-0486


GREGORY P. WYROSDICK
REGISTERED PROFESSIONAL ENGINEER
LICENSE NO. 15874
STATE OF MISSISSIPPI
04/24/20

| NO. | DATE | REVISION/ISSUE |
|---|---|---|
| | | |

COFFEE CREEK
STORMWATER OUTFALL

ELECTRICAL LEGEND, SCHEDULE, AND DETAILS

| | |
|---|---|
| DATE 24 APRIL, 2020 | SHEET NUMBER E-000 |
| SCALE | |
| DRAWN BY JGR / REVIEWED BY GPW | |
| PROJECT NO. 19049 | |

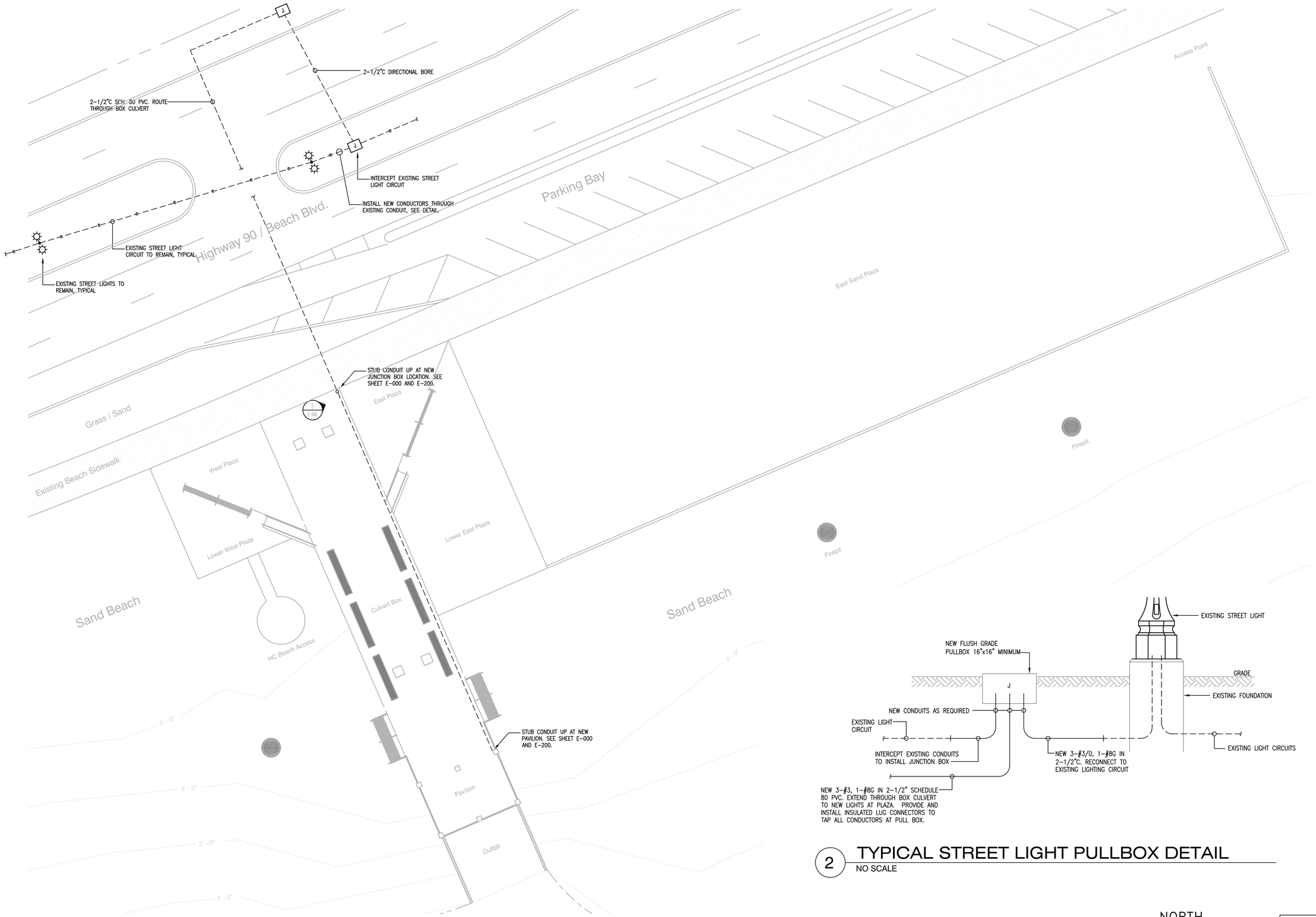


1 ELECTRICAL SITE PLAN

1" = 20'-0"




2 TYPICAL STREET LIGHT PULLBOX DETAIL

NO SCALE

NORTH


COVINGTON CIVIL AND ENVIRONMENTAL
2510 14TH STREET, SUITE 1010
GULFPORT, MISSISSIPPI 39501
Office: (228)396-0486


GREGORY P. WYROSDICK REGISTERED PROFESSIONAL ENGINEER STATE OF MISSISSIPPI
04/24/20

| NO. | DATE | REVISION/ISSUE |
|---|---|---|
| | | |

# COFFEE CREEK STORMWATER OUTFALL

ELECTRICAL SITE PLAN


WELCON ELECTRICAL CONSULTANTS, PLLC
14116 CUSTOMS BLVD., SUITE #111
GULFPORT, MISSISSIPPI 39503
228.822.8000 - FAX 228.206.3000
WEC PROJECT #: 20-CVE-01


| | |
|---|---|
| DATE 24 APRIL, 2020 | SHEET NUMBER E-100 |
| SCALE | |
| DRAWN BY JGR | REVIEWED BY GPW |
| PROJECT NO. 19049 | |

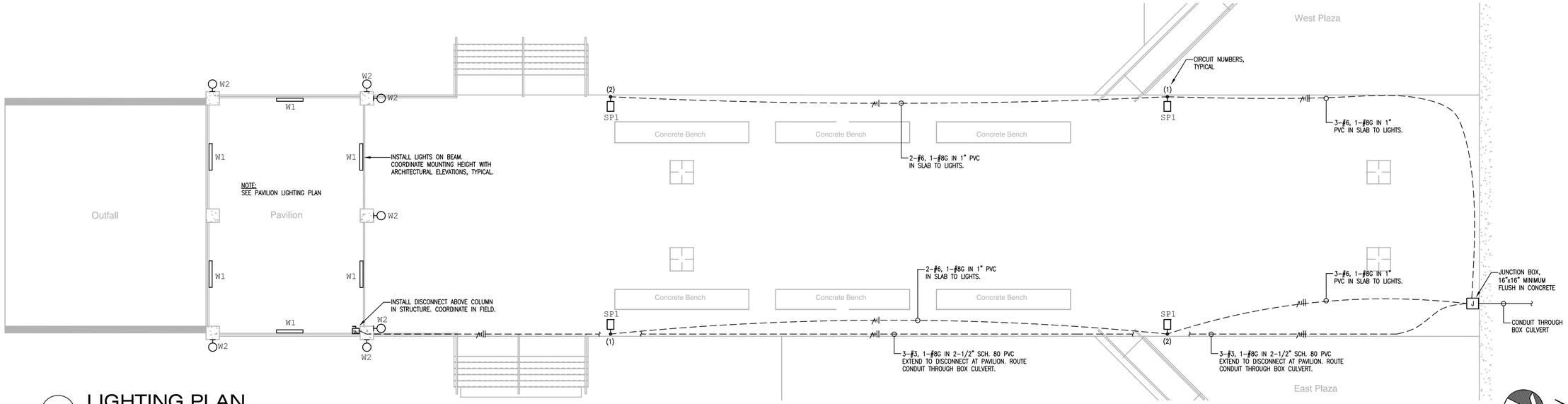


1 LIGHTING PLAN

1/8" = 1'-0"

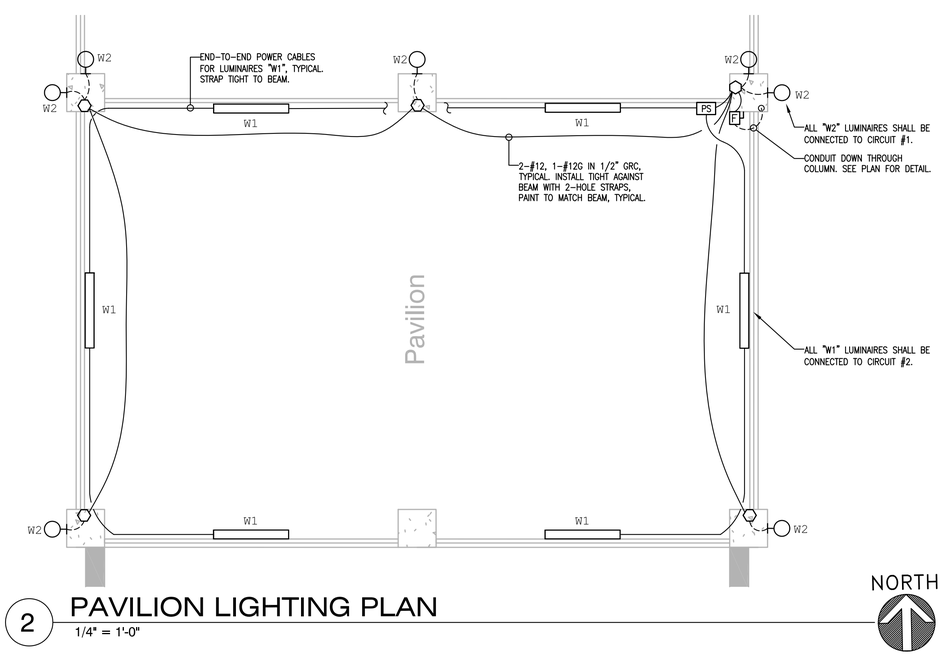


2 PAVILION LIGHTING PLAN

1/4" = 1'-0"


COVINGTON
CIVIL AND ENVIRONMENTAL
2510 14TH STREET, SUITE 1010
GULFPORT, MISSISSIPPI 39501
Office: (228)396-0486


GREGORY P. WYROSDICK
REGISTERED PROFESSIONAL ENGINEER
LICENSE NO. 15-15
STATE OF MISSISSIPPI
04/24/20

| NO. | DATE | REVISION/ISSUE |
|---|---|---|
| | | |

# COFFEE CREEK STORMWATER OUTFALL

LIGHTING PLAN


WELCON
ELECTRICAL CONSULTANTS, PLLC
14116 CUSTOMS BLVD., SUITE #111
GULFPORT, MISSISSIPPI 39503
228.822.8000 - FAX 228.206.3000
WEC PROJECT #: 20-CVE-01


DATE 24 APRIL, 2020

SCALE

DRAWN BY JGR

REVIEWED BY GPW

PROJECT NO. 19049

SHEET NUMBER E-200